Gimatic Mechatronics

Electric Automation

CN-EN 2016

带有 2 个颚式钳的平行电动抓持器
2-jaw parallel electric grippers

Fraunhofer TESTED® DEVICE IPA
GIMATIC S.p.A.
Parallel gripper MPPM1606
Report No. GI 1112-583

MPPM	F [N]	s [mm]	m [g]
MPPM1606	67	2x3	145
MPPM2508	125	2x4	330
MPPM3210	245	2x5	525

Fraunhofer TESTED® DEVICE IPA
Gimatic S.r.l.
Gripper MPXM1612
Report No. GI 1501-746

MPXM	F [N]	s [mm]	m [g]
MPXM1612	68	2x6	184
MPXM2516	95	2x8	390
MPXM3220	215	2x10	604

Fraunhofer TESTED® DEVICE IPA
Gimatic S.r.l.
Gripper MPLM1630
Report No. GI 1501-746

MPLM	F [N]	s [mm]	m [g]
MPLM1630	63	2x15	263
MPLM2535	98	2x17.5	500
MPLM3240	210	2x20	844

带有 2 个颚式钳的角形电动抓持器
2-jaw angular electric grippers

MPBM	C [Ncm]	s[°]	m [g]
MPBM1640	68	2x23°	140
MPBM2540	151	2x23°	315
MPBM3240	277	2x23°	510

电动道口抓持器
Electric sprue grippers

MPBS	C [Ncm]	s[°]	m [g]
MPBS1630	70	2x16°	145
MPBS1630S	70	2x16°	150

带有 3 个颚式钳的平行电动抓持器
3-jaw parallel electric grippers

Fraunhofer TESTED® DEVICE IPA
Gimatic S.p.A.
MPTM1606
Report No. GI 1302-637

MPTM	F [N]	s [mm]	m [g]
MPTM1606	57	3x3	183
MPTM2508	124	3x4	430
MPTM3210	220	3x5	693

带有 2 个颚式钳的径向电动抓持器
2-jaw radial electric grippers

MPRM	C [Ncm]	s[°]	m [g]
MPRM1690	52	2x93°	210
MPRM2590	90	2x93°	445
MPRM3290	256	2x93°	730

电动旋转执行器
Electric rotary actuators

Fraunhofer IPA TESTED® DEVICE
Gimatic S.p.A. MRE16180
Report No. GI 1302-637

MRE	C [Ncm]	s[°]	m [g]
MRE16180	45	90°/180°	195
MRE25180	80	90°/180°	400
MRE32180	138	90°/180°	738

电动分度工作台
Indexing electrical tables

MTRE	C [Ncm]	s[°]	m [g]
MTRE3204C	196	4x90°	1800
MTRE3204A	196	4x90°	1800
MTRE3206C	196	6x60°	1800
MTRE3206A	196	6x60°	1800
MTRE3208C	196	8x45°	1800
MTRE3208A	196	8x45°	1800
MTRE3212C	196	12x30°	1800
MTRE3212A	196	12x30°	1800

电动快速更换器
Electric quick changer

EQC	V [Vdc]	Payload [kg]	m [g]
EQC75-A	24	10	1000
EQC75-B			160

(*) 正在构造
Under construction

线性电机
Linear motors

ML	V [Vdc]	Ø [mm]	m [g]
ML2570X4	72	25	273
ML2570X6	72	25	384
ML25300X4	325	25	273
ML25300X6	325	25	384
ML4070X4	72	40	670
ML4070X6	72	40	940
ML40300X4	325	40	700
ML40300X6	325	40	980

电机滑轨
Motor sliders

ML	L [mm]	Ø [mm]	m [g]
ML12X10L218	218	12	190
ML12X13L271	271	12	235
ML12X16L235	325	12	285
ML12X20L395	395	12	350
ML12X27L519	519	12	460
ML12X33L625	625	12	560
ML12X38L715	715	12	655
ML12X44L820	820	12	735
ML20X10L238	238	20	490
ML20X14L309	309	20	620
ML20X18L380	380	20	760
ML20X21L433	433	20	865
ML20X27L542	542	20	1079
ML20X33L646	646	20	1285
ML20X44L842	842	20	1670
ML20X55L1036	1036	20	2055
ML20X72L1338	1338	20	2650

编码器传感器
Encoder sensors

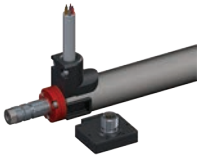

SE	V [Vdc]	r[µm]/[°]	m [g]	
SE9ABZ1	5	±25 µm	19	
SE9ABZ1-HR	5	±10 µm	19	
SE9SIN1	5	-	19	(*)
SE9HALL1	5	±60°	19	

电动线性执行器
Electric linear actuators

LV	V [Vdc]	F [N]	s [mm]	m [g]
LV25050-70	72	98.1	50	1170
LV25100-70	72	98.1	100	1380
LV25150-70	72	105.4	150	1825
LV25200-70	72	105.4	200	2185
LV25050-300	325	117	50	1170
LV25100-300	325	117	100	1380
LV25150-300	325	131.6	150	1825
LV25200-300	325	131.6	200	2185
LV40050-70	72	258	50	2730
LV40100-70	72	258	100	3590
LV40150-70	72	294	150	4430
LV40200-70	72	294	200	4865
LV40050-300	325	421	50	2730
LV40100-300	325	421	100	3590
LV40150-300	325	412	150	4430
LV40200-300	325	412	200	4865

附件
Accessories

电动线性导向器
Electric linear guides

LVP	V [Vdc]	F [N]	s [mm]	m [g]
LVP250200-70	72	105.4	200	2730
LVP250300-70	72	105.4	300	3040
LVP250400-70	72	105.4	400	3330
LVP250500-70	72	105.4	500	3635
LVP250200-300	325	131.6	200	2730
LVP250300-300	325	131.6	300	3040
LVP250400-300	325	131.6	400	3330
LVP250500-300	325	131.6	500	3635
LVP400200-70	72	294	200	6350
LVP400300-70	72	294	300	7000
LVP400500-70	72	294	500	8200
LVP400700-70	72	294	700	9450
LVP401000-70	72	294	1000	11350
LVP400200-300	325	412	200	6350
LVP400300-300	325	412	300	7000
LVP400500-300	325	412	500	8200
LVP400700-300	325	412	700	9450
LVP401000-300	325	412	1000	11350

洁净室抓持解决方案
Cleanroom Gripping Solution

Fraunhofer IPA TESTED® DEVICE
Gimatic S.r.l.
Gripper MPPM16DS-ED-GMP
Report No. G1 1410-728

GMP

术语表
Nomenclature

F [N]	力	Force
C [Ncm]	扭矩	Torque
s [mm]	行程	Stroke
m [g]	质量	Weight
V [Vdc]	电源	Power Supply
L [m]	长度	Length
r [µm]/[°]	分辨率	Resolution

举例
平行夹具尺寸 16，版本 NPN，力量可调

EXAMPLE
Parallel gripper size 16, version NPN, with force adjustment.

代码组成
Code composition

Digit	1	2	3	4	5	6	7	8	9	10	11	12
	M	**P**	**P**	**M**	**16**	**06**	**N**	**-**	**-**	**V**	**F**	**-**

MPPM1606NVF

	1 Digit	2 Digit	3 Digit	4 Digit	5 Digit	6 Digit	7 Digit	8 Digit	9 Digit	10 Digit	11 Digit	12 Digit
代码 *CODES*	系列 *FAMILY*	类型 *TYPE*	颚式钳类型 *JAW TYPE*	结构 *STRUCTURAL DETAIL*	尺寸 *SIZE*	行程/步骤 *STROKE / STEP*	命令 *COMMAND TYPE*	额外 *EXTRA*	可选 *OPTIONAL FEEDBACK* (*) (#)	性能 *PERFORMANCE* (*)	选项 A *OPTIONAL I/O* (*) (#)	自定义 *CUSTOMIZATION*
MPPM	**M** Mechatronics *Mechatronics*	**P** 抓持器 *Gripper*	**P** 平行 *Parallel*	**M** 无电刷电机 *Brushless Motor*	**16** **25** **32**	**06/08/10** [mm]	**-** PNP **N** NPN	**-**	**-** 标准 *Standard* **ABZ** 编码器 *Encoder* **SIN** Sin/Cos	**-** 力 *Force* **V** 频率 *Frequency*	**-** 标准 *Standard* **F** 模拟输入 *Analog in* **A** 模拟输出 *Analog out* **P** 峰值数字输出 *Peak digital output*	**-** 标准 *Standard* **GXY** 自定义 XY *Customization XY*
MPXM			**X** 额外 *Extra*			**12/16/20** [mm]						
MPLM			**L** 长 *Long*			**30/35/40** [mm]						
MPTM			**T** 三 *Three*			**06/08/10** [mm]						
MPBM			**B** 角形 *Angular*			**40** [deg]						
MPBS				**S** 道口 *Sprue*	**16**	**30** [deg]		**S** 传感器 *Sensor*				
MPRM			**R** 径向 *Radial*	**M** 无电刷电机 *Brushless Motor*	**16** **25** **32**	**90** [deg]		**-**				
MRE		**R** 旋转式 *Rotative*	**-**	**E** 电动 *Electric*		**90/180** [deg] 可调整 *Adjustable*						
MTRE		**T** 工作台 *Table*	**R** 旋转式 *Rotative*		**32**	**04÷12** [steps]		**A/C** 方向 *Direction*	**-** 标准 *Standard*		**-** 标准 *Standard*	

(*) 除非各个产品另有说明，目前正在准备带有该符号的所有变量。

(#) 不包括变量（如果设置 2 个位数中的一个，另一个假设为标准值 “-” ）。

一般信息
标准设备配备集成电子电路，以提供带有 3 针脚 M8 连接器的即插即用解决方案。如果数值被分配为数字 11，则表示带有 4 针脚 M8 连接器的即插即用。如果数值被分配为数字 9，则表示设备不是即插即用型，而是直接访问电机连接和反馈信号。

命令类型
即插即用设备（3 针脚或 4 针脚连接）的数字命令信号类型。

可选反馈
用户直接控制设备的反馈信号类型。编码器 (ABZ) 或模拟 (SIN/COS) 信号之间的选择。

性能
识别在力/扭矩或负载循环/频率 (V) 方面优化的设备。

可选输入/输出
第四针脚用于力/扭矩调整 (F)，或者与颚式钳行程成正比的模拟输出 (A)，或者自动生成与移动结束相关的数字信号 (P)。

(*) Unless otherwise indicated for individual products, all variants with this symbol are currently under preparation.

(#) Exclusive variants (if one of the 2 digits is set, the other assumes the standard value “-”).

GENERAL INFORMATION
Standard devices are supplied with integrated electronic circuit to provide a Plug&Play solution with 3-pin M8 connector. If a value is assigned to digit 11, this indicates a Plug&Play with 4-pin M8 connector. If a value is assigned to digit 9, this indicates a device which is NOT Plug&Play but has direct access to the motor connections and feedback signal.

COMMAND TYPE
Type of digital command signal for the Plug&Play device (3 or 4-pin connection).

OPTIONAL FEEDBACK
Type of feedback signal for a device controlled directly by the user. Choice between encoder (ABZ) or analog (SIN/COS) signals.

PERFORMANCE
Identifies a device which is optimised in terms of force/torque or in terms of duty cycle/frequency (V).

OPTIONAL I/O
Use of the fourth pin for force/torque adjustment (F), or for analog output proportional to the jaw stroke (A), or for automatic generation of a digital signal relevant to the end of the movement (P).

举例
电动线性执行器，尺寸 25，行程 50，总线电压 300，传感器 ABZ 和霍尔

EXAMPLE
Electric linear actuator, size 25, stroke 50, bus volatage 300, sensors ABZ and HALL

代码组成
Code composition

Digit	1	2	3		4	5	6
	LV	**25**	**050**	**-**	**300**	**ABZ**	**HALL**
			LV				

	1 Digit	2 Digit	3 Digit	4 Digit	5 Digit	6 Digit
代码 *CODES*	系列 *FAMILY*	尺寸 *SIZE*	行程 *STROKE*	总线电压 *BUS VOLTAGE*	编码器传感器 *ENCODER SENSOR*	相位传感器 *PHASE SENSOR*
LV	**LV** 电动线性执行器 *Electric linear actuators*	**25**	**050** **100** **150** **200**	**300** **70**	**ABZ** **SIN**	**/** **HALL**
		40	**050** **100** **150** **200**			

举例
电动线性导向器，尺寸 25，行程 400，总线电压 300，传感器 ABZ和 霍尔

EXAMPLE
Electric linear guide, size 25, stroke 400, bus voltage 300, sensors ABZ and HALL

代码组成
Code composition

Digit	1	2	3		4	5	6
	LVP	**25**	**0400**	**-**	**300**	**ABZ**	**HALL**
			LVP				

	1 Digit	2 Digit	3 Digit	4 Digit	5 Digit	6 Digit
代码 *CODES*	系列 *FAMILY*	尺寸 *SIZE*	行程 *STROKE*	总线电压 *BUS VOLTAGE*	编码器传感器 *ENCODER SENSOR*	相位传感器 *PHASE SENSOR*
LVP	**LV** 电动线性执行器 *Electric linear actuators*	**25**	**0200** **0300** **0400** **0500**	**300** **70**	**ABZ** **SIN**	**/** **HALL**
		40	**0200** **0300** **0500** **0700** **1000**			

带有 2 个颚式钳的平行自对中电动抓持器

- 即插即用用户友好型抓持器。
- 抓持器啮合时不耗电。
- 不要求编程。
- 停电时保证保持抓持器。
- 自适应颚式部件。
- 长寿型无电刷电机（无电刷直流电机）。
- 内置式电机驱动器。
- 24 伏直流低压电源。
- M8x1 3 极标准连接。
- PLC 作为气动阀可控。
- 不包括自对中系统。
- 纤维碳齿轮减速。
- 1000 万周期免维护。
- 用于重型负载的 T 型槽式颚式钳。
- 最佳平衡重量、尺寸和力度。
- 兼容旋转执行器接头。
- 可选磁性传感器。

2-jaw parallel self-centering electric gripper

- *Plug & play user friendly gripper.*
- *No electricity consumption when gripper is engaged.*
- *No programming required.*
- *Gripper retention guaranteed in event of blackout.*
- *Self Adapting jaws part.*
- *Long life Brushless motor (Brushless DC).*
- *Built-in motor driver.*
- *24 Vdc Low Voltage Power Supply.*
- *M8x1, 3 poles standard connection.*
- *Controllable by PLC as a pneumatic valve.*
- *Exclusive self-centering system.*
- *Fiber-carbon gear reduction.*
- *10 milion cycle maintenance-free.*
- *T-slot syle jaws for heavy loads.*
- *Weight-dimensions-force best trade off.*
- *Rotary actuator fitting compatible.*
- *Optional magnetic sensors.*

MPPM1606

MPPM2508

MPPM3210

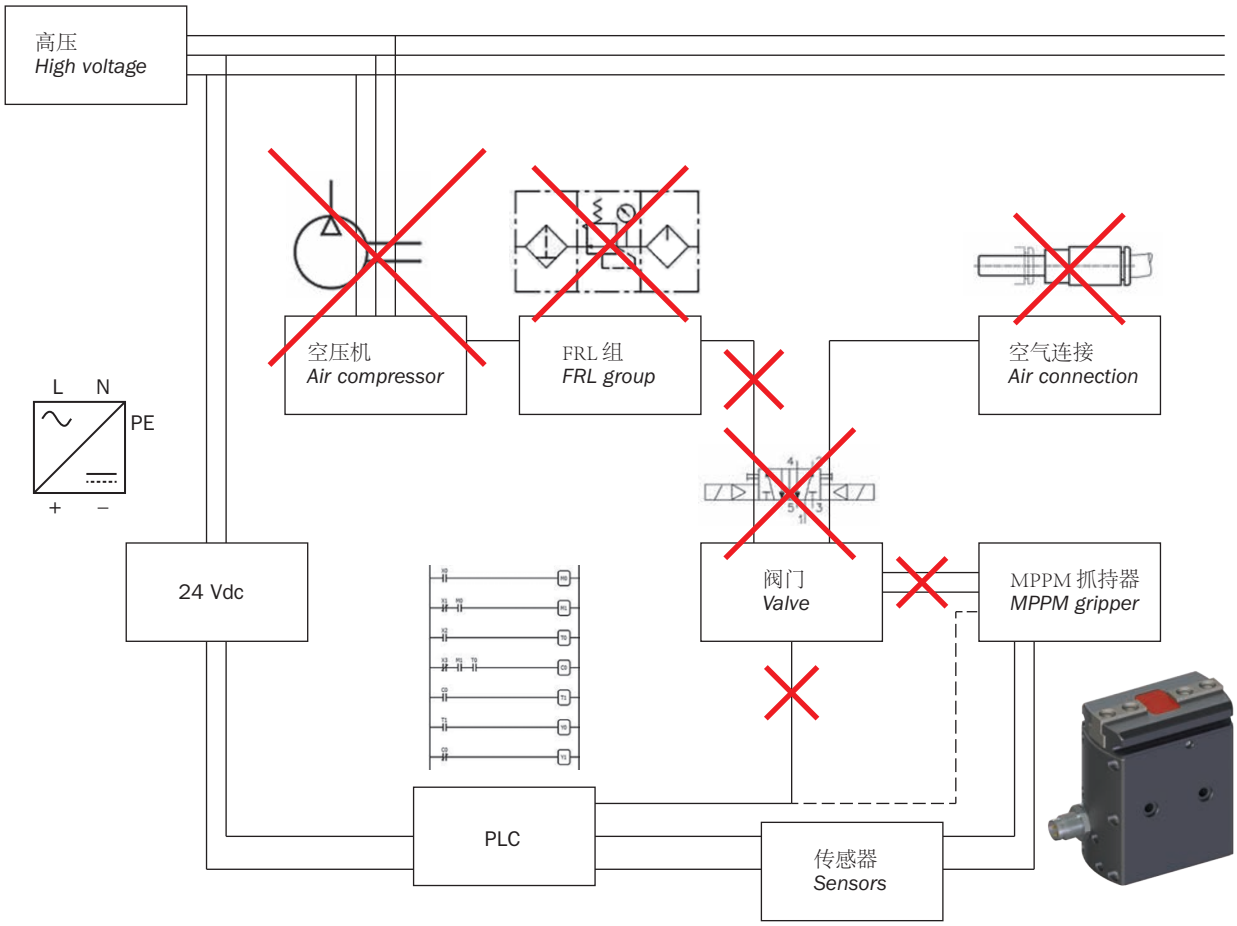

	MPPM1606	MPPM2508	MPPM3210
总抓持力 *Total gripping force*	67 N	125 N	245 N
行程 (±0.2 毫米) *Stroke*	2x3 mm	2x4 mm	2x5 mm
30° C 环境温度频率 *Frequency at an ambient temperature of 30°C*	1 Hz	0.91 Hz	0.91 Hz
颚式钳关闭时间 *Jaw closing time*	0.08 s	0.121 s	0.15 s
抓持器工作时间 *Working gripper time*	0.21 s	0.3 s	0.27 s
30° C 环境温度负载循环 *Duty cycle at an ambient temperature of 30°C*	43%	55%	50%
电源 *Power supply*	24 Vdc ±10%	24 Vdc ±10%	24 Vdc ±10%
峰值电流 *Peak current*	0.9 Apk	1.2 Apk	3.8 Apk
标称电流 *Nominal current*	0.3 Arms	0.4 Arms	0.8 Arms
无电刷电机功率 *Brushless motor power*	6 W	11 W	23 W
连接 *Connection*	M8 - 3极 *M8 - 3 poles*		
打开/关闭输入信号 *Open/closed input signal*	PNP 开路集电极 *PNP open collector*		
重复精确度 *Repetition accuracy*	0.02 mm	0.02 mm	0.02 mm
运行温度 *Operating temperature*	5° ÷ 60°C	5° ÷ 60°C	5° ÷ 60°C
环境防护等级 *Environmntal Degree*	IP54	IP54	IP54
噪音水平 *Noise level*	< 70 dB	< 70 dB	< 70 dB
质量（包括电机） *Mass (motor included)*	145 g	330 g	525 g
ISO14644-1 洁净室认证 *ISO14644-1 Clean Room Certification*	CLASS 4	-	-
参考标准 *Reference standards*	EN 61000-6-2 + EC + IS1; EN 61000-6-3 + A1		
重心转动惯量 Jxx *Barycentric moment of inertia*	0.42 $kgcm^2$	1.68 $kgcm^2$	3.4 $kgcm^2$
重心转动惯量 Jyy *Barycentric moment of inertia*	0.54 $kgcm^2$	2.22 $kgcm^2$	4.83 $kgcm^2$
重心转动惯量 Jzz *Barycentric moment of inertia*	0.25 $kgcm^2$	1.03 $kgcm^2$	2.33 $kgcm^2$

抓持力

本电动抓持器可用于外部或内部抓持应用。
部件将被抓持在颚式钳行程内的任意位置。
抓持部件后，弹簧力将固定部件
（电机关闭和零消耗）。
即使停电。
另外，即使停电，抓持器机构也不可逆转。
因此，请勿尝试手动打开或关闭抓持器。

Gripping force

This electric gripper can be used for either external or internal gripping applications.
The part will be gripped in any position within the jaw stroke.
After the part is gripped, the spring force will hold the part (motor OFF and ZERO consumption).
Even in case of power black-out.
Furthermore the gripper mechanism is irreversible, even without power supply.
So do not attempt to open or close the gripper manually.

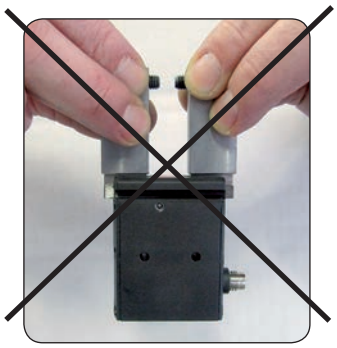

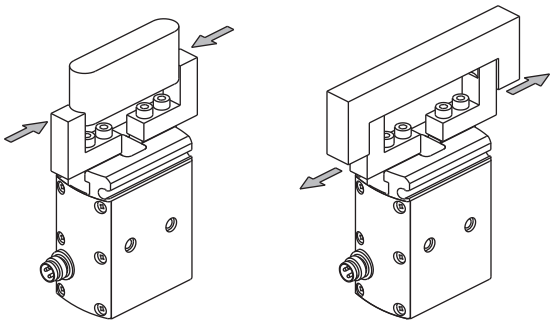

图形以抓持工具长度 Z 和伸出长度 X 为函数显示每个颚式钳的抓持力。

The graphs show the gripping force on each jaw, as a function of the gripping tool length Z and the overhanging X.

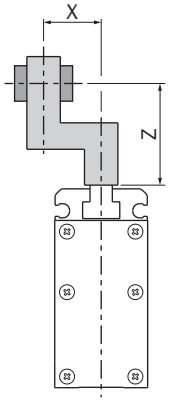

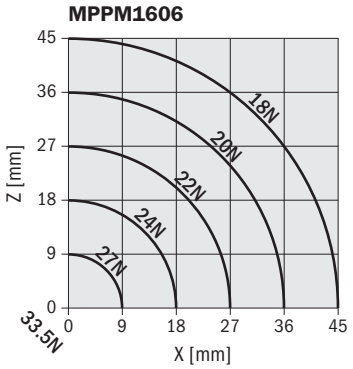

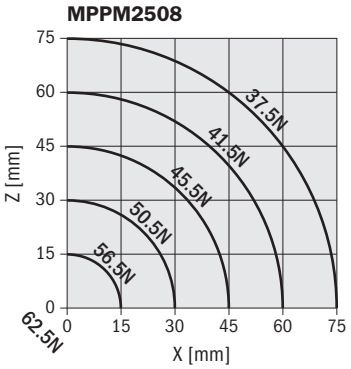

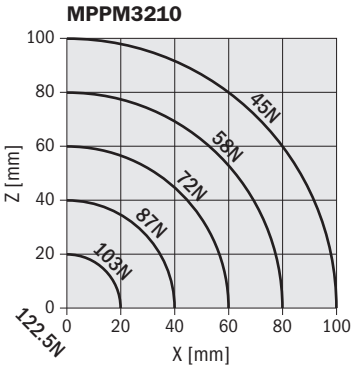

尺寸（毫米）
Dimensions (mm)

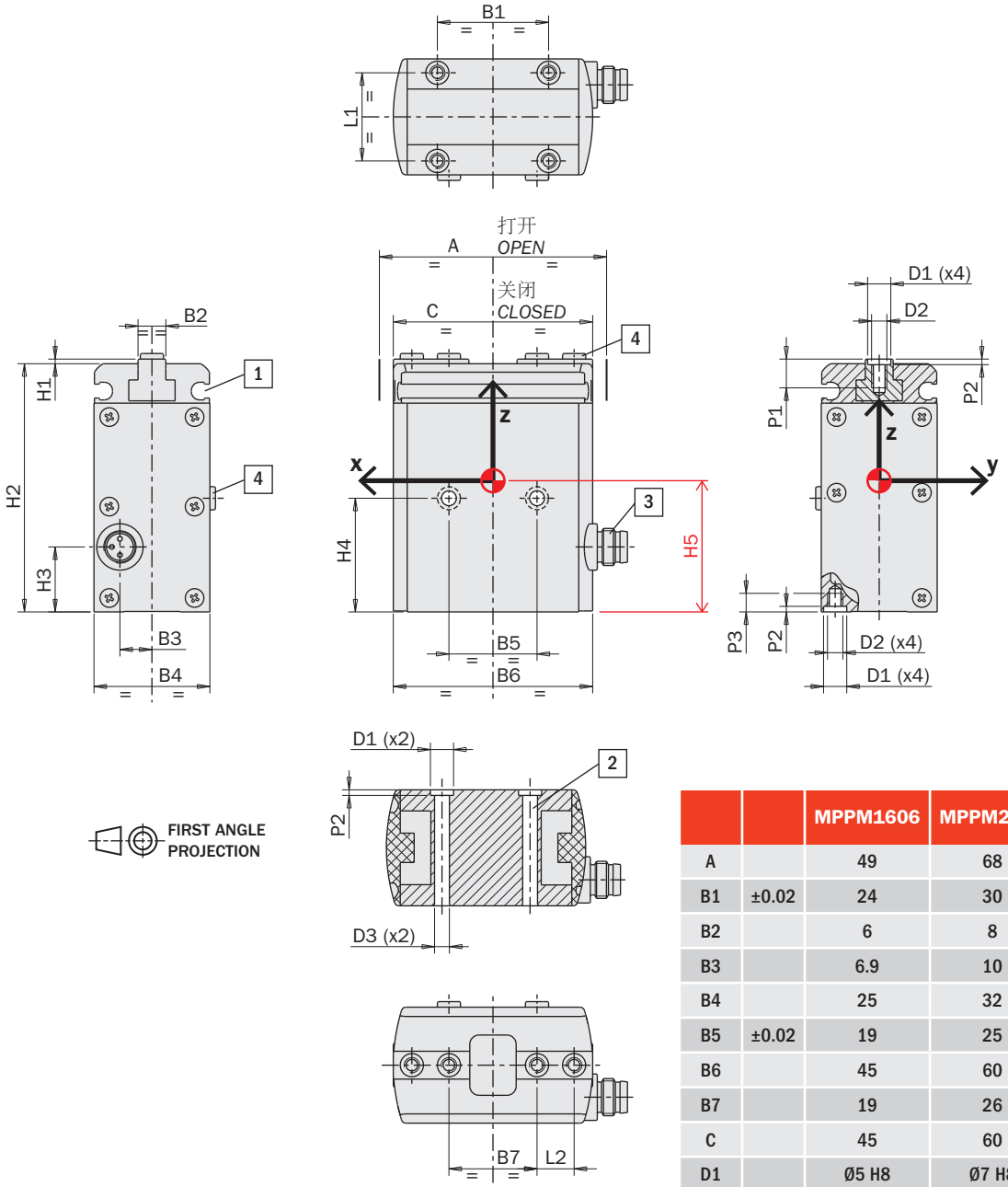

		MPPM1606	MPPM2508	MPPM3210
A		49	68	83
B1	±0.02	24	30	36
B2		6	8	9
B3		6.9	10	11
B4		25	32	35
B5	±0.02	19	25	30
B6		45	60	73
B7		19	26	32
C		45	60	73
D1		Ø5 H8	Ø7 H8	Ø7 H8
D2		M3	M4	M5
D3		Ø3.2	Ø4.2	Ø5.2
H1		1	1	1
H2		53.5	70	80
H3		14	17	19
H4	±0.02	24.5	32	38
H5		32.5	42.6	48.4
L1	±0.02	19	24	26
L2	±0.02	8	12	14
P1		6.2	8	8.5
P2	+0.1	1.2	1.5	1.5
P3		4	6	8

1 磁性传感器插槽
Magnetic sensor slot

2 抓持器紧固通孔
Through hole for gripper fastening

3 电气连接
Connexion électrique

4 对中衬套
Centering sleeves

电气连接

带有 3 极的 M8 标准连接器可以提供 24 伏直流电源以及关闭/打开信号 (ON/OFF)。

不需要其它电子部件驱动抓持器。

Electrical connection

It is possible to provide the power supply at 24Vdc and the and the closing/opening signal (ON/OFF) by the M8 standard connector with 3 poles.

No further electronics is necessary to drive the gripper.

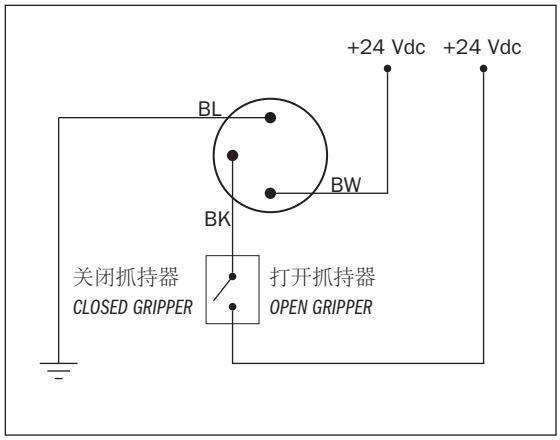

可选 M8x1 标准阴性连接器。
Gimatic 代码： CFGM800325P / CFGM890325P。

Optional M8x1 standard female connector.
Gimatic code: CFGM800325P / CFGM890325P.

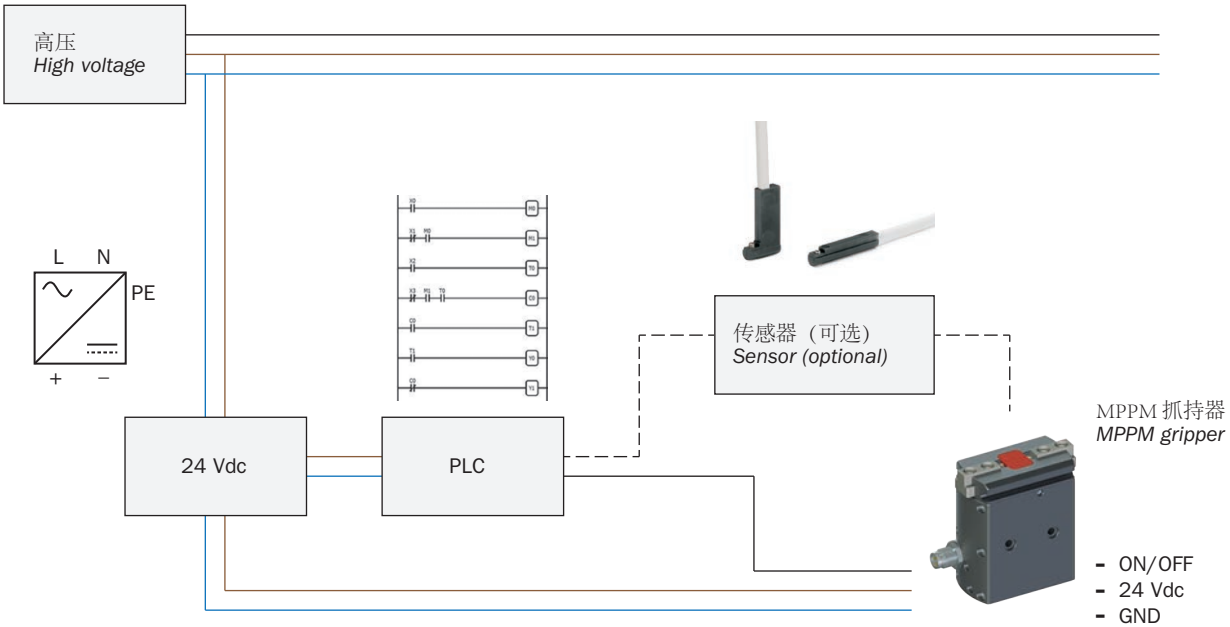

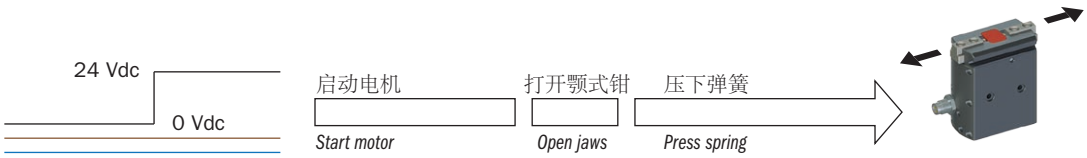

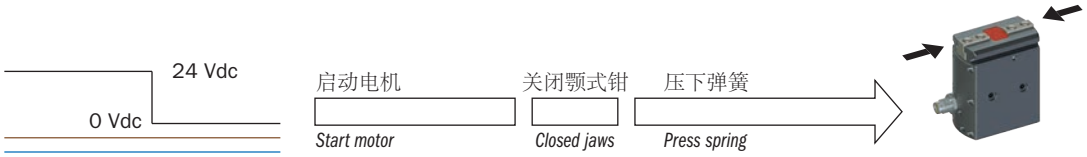

传感器

通过内部颚式钳上的磁体检测位置的一个或多个磁性传感器（可选）可以检查运行位置。
有关详细信息，请参见“附件”部分。

Sensors

The operating position can be checked by one or more magnetic sensors (optional), that detect the position by the magnets on the jaws inside.
For details, see the "Accessories" section.

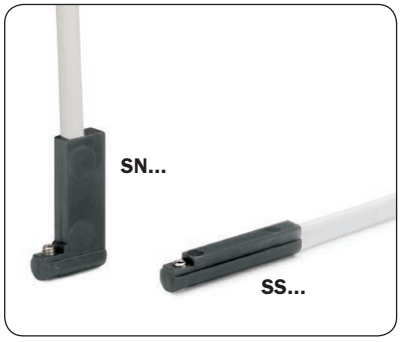

它们均提供了 3 线扁平线缆和一个 LED 灯。

They are all provided with a 3-wire flat cable and a LED.

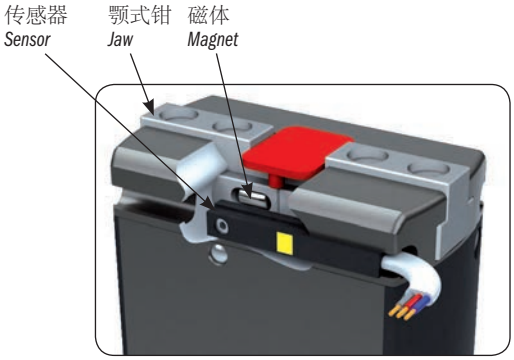

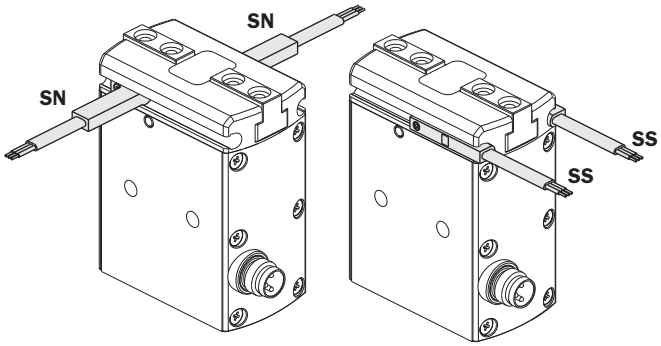

安全负载

检查表中的最大允许负载。
力度或扭矩过大会损坏抓持器，引起运行问题以及危及操作人员的安全。
F s、Mx s、My s、Mz s 为配有静止颚式钳的静态条件下的最大允许负载。
F d、Mx d、My d、Mz d 为配有运行颚式钳的动态条件下的最大允许负载。
下表也显示抓持器在峰值性能运行时每个抓持工具上的最大允许负载 (m)。

Safety loads

Check the table for the maximum permitted loads.
Excessive forces or torques can damage the gripper, cause operation problems and endanger the safety of the operator.
F s, Mx s, My s, Mz s, are the maximum permitted loads under static conditions, that is with motionless jaws.
F d, Mx d, My d, Mz d, are the maximum permitted loads under dynamic conditions, that is with running jaws.
The following table also shows the maximum permitted load (m) on each gripping tool when the gripper operates at peak performance.

	MPPM1606	MPPM2508	MPPM3210
F s	60 N	120 N	200 N
Mx s	3 Nm	8 Nm	20 Nm
My s	3 Nm	8 Nm	20 Nm
Mz s	3 Nm	8 Nm	20 Nm
F d	0.6 N	1.2 N	2 N
Mx d	3 Ncm	8 Ncm	20 Ncm
My d	3 Ncm	8 Ncm	20 Ncm
Mz d	3 Ncm	8 Ncm	20 Ncm
m	60 g	120 g	200 g
Z	45 mm	65 mm	90 mm

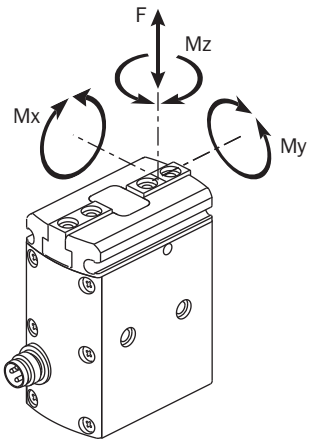

紧固抓持器

抓持器可以紧固到静态或移动部件上。
位于移动部件上时，必须注意承受抓持器及其负载的惯性力。

- 要将抓持器紧固到底座上，使用通过安装板旋入抓持器内的四个螺丝 (SA)。
- 要紧固抓持器侧部，使用通孔 (D3) 内的两个螺丝 (SB)。

在每种情况下，放置包装内提供的两个对中衬套 (BA)。检查表中安装板内其外罩的尺寸（DA 和 PA）。

Gripper fastening

The gripper can be fastened to a static or moving part.
When on a moving part, you must pay attention to the inertial force to which the gripper and its load are subjected.

- *To fasten gripper to base, use four screws (SA) through the mounting plate, screwed in the gripper.*
- *To fasten the gripper side, use two screws (SB) in the through holes (D3).*

In every case, put the two centering sleeves (BA), which are supplied in the package. Check the dimensions (DA and PA) in the table for their housings in the mounting plate.

	MPPM1606	MPPM2508	MPPM3210
B4	25	32	35
D3	Ø3.2	Ø4.2	Ø5.2
DA	Ø5 h7	Ø7 h7	Ø7 h7
P3	4	6	8
PA	1.2	1.5	1.5
SA	M3	M4	M5
SB	M3	M4	M5

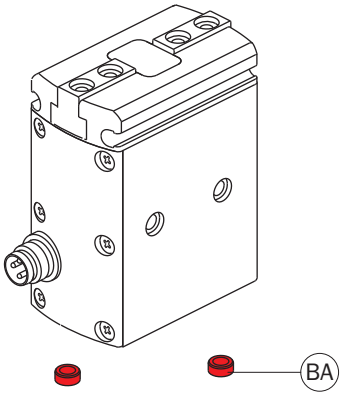

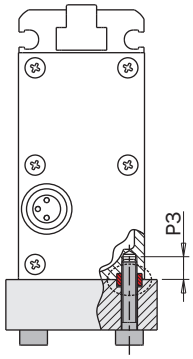

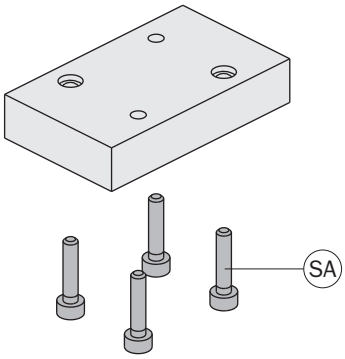

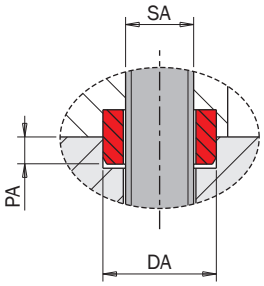

包装内提供用于抓持工具的 4 个对中环 (BA) 和用于外罩的 2 个对中衬套 (BA)。

4 centering rings (BA) for the gripping tools and 2 centering sleeves (BA) for the housing are supplied in the packaging.

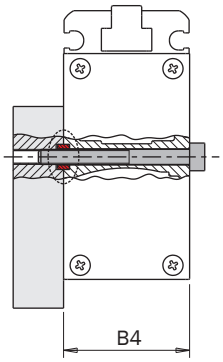

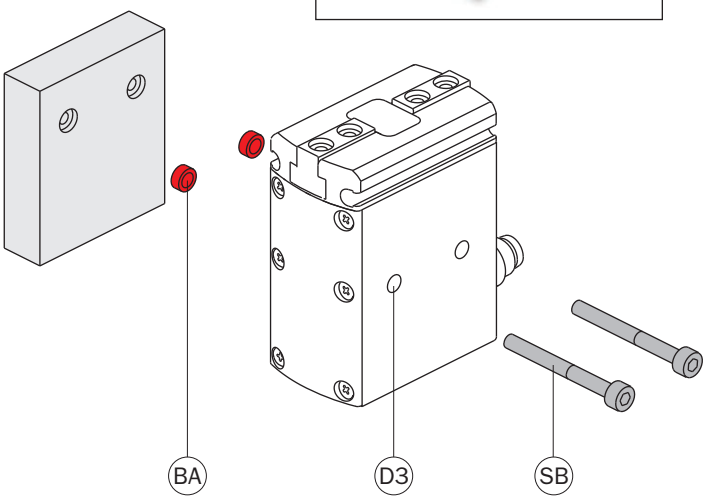

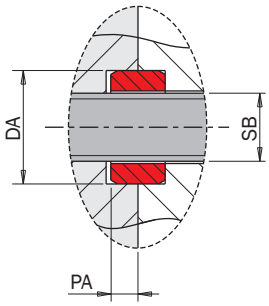

紧固抓持工具

抓持工具必须尽可能短而轻。
必须采用颚式钳校准孔 (D1) 内的两个螺丝 (SC) 和两个对中衬套 (BA) 对其进行紧固。

Gripping tool fastening

The gripping tools must be as short and light as possible. They must be fastened by two screws (SC) and two centering sleeves (BA) in the calibrated holes (D1) of the jaws.

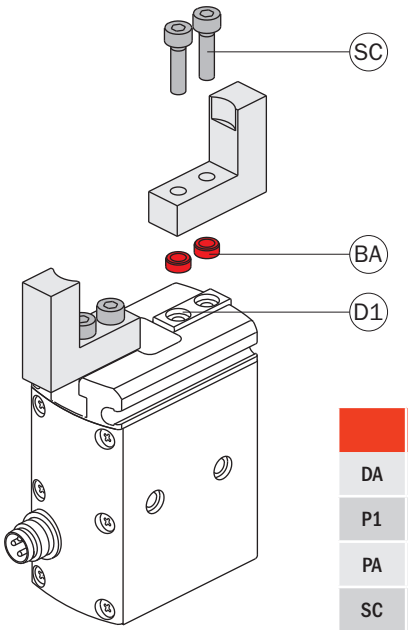

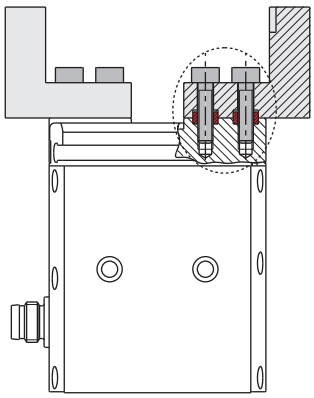

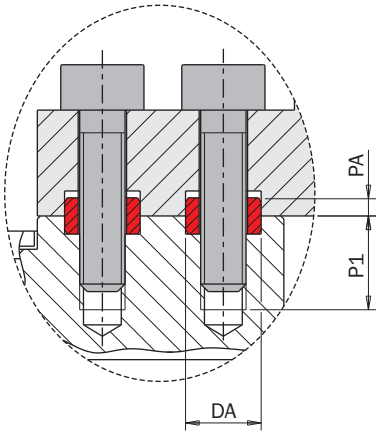

	MPPM1606	MPPM2508	MPPM3210
DA	Ø5 h7	Ø7 h7	Ø7 h7
P1	6.2	8	8.5
PA	1.2	1.5	1.5
SC	M3	M4	M5

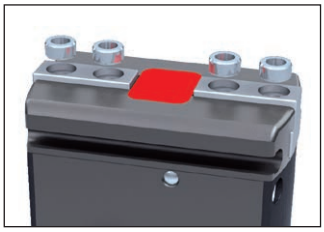

系列兼容性

MPPM 系列抓持器完美兼容 MRE 系列旋转执行器，无需使用任何特殊板。

Serie compatibility

MPPM grippers series is perfectly compatible with MRE rotary series actuators without any special plate.

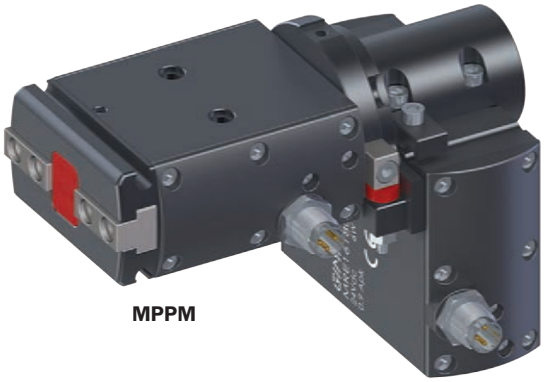

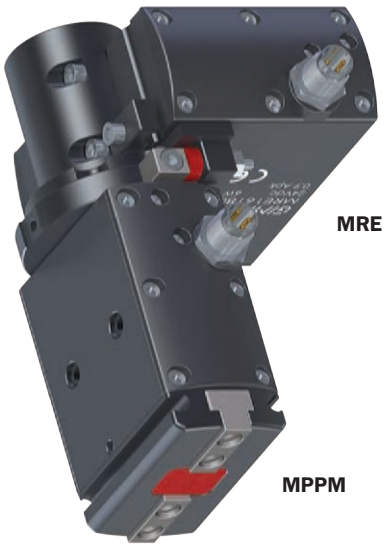

带有 2 个颚式钳的平行自对中电动抓持器

- 即插即用用户友好型抓持器。
- 抓持器啮合时不耗电。
- 不要求编程。
- 停电时保证保持抓持器。
- 自适应颚式部件。
- 额外行程
- 长寿型无电刷电机（无电刷直流电机）。
- 内置式电机驱动器。
- 24 伏直流低压电源。
- M8x1 3 极标准连接。
- PLC 作为气动阀可控。
- 不包括自对中系统。
- 纤维碳齿轮减速。
- 1000 万周期免维护。
- 用于重型负载的 T 型槽式颚式钳。
- 最佳平衡重量、尺寸和力度。
- 兼容旋转执行器接头。
- 可选磁性传感器。

2-jaw parallel self-centering electric gripper

- *Plug & play user friendly gripper.*
- *No electricity consumption when gripper is engaged.*
- *No programming required.*
- *Gripper retention guaranteed in event of blackout.*
- *Self Adapting jaws part.*
- *Extra stroke.*
- *Long life Brushless motor (Brushless DC).*
- *Built-in motor driver.*
- *24 Vdc Low Voltage Power Supply.*
- *M8x1, 3 poles standard connection.*
- *Controllable by PLC as a pneumatic valve.*
- *Exclusive self-centering system.*
- *Fiber-carbon gear reduction.*
- *10 milion cycle maintenance-free.*
- *T-slot syle jaws for heavy loads.*
- *Weight-dimensions-force best trade off.*
- *Rotary actuator fitting compatible.*
- *Optional magnetic sensors.*

MPXM1612

MPXM2516

MPXM3220

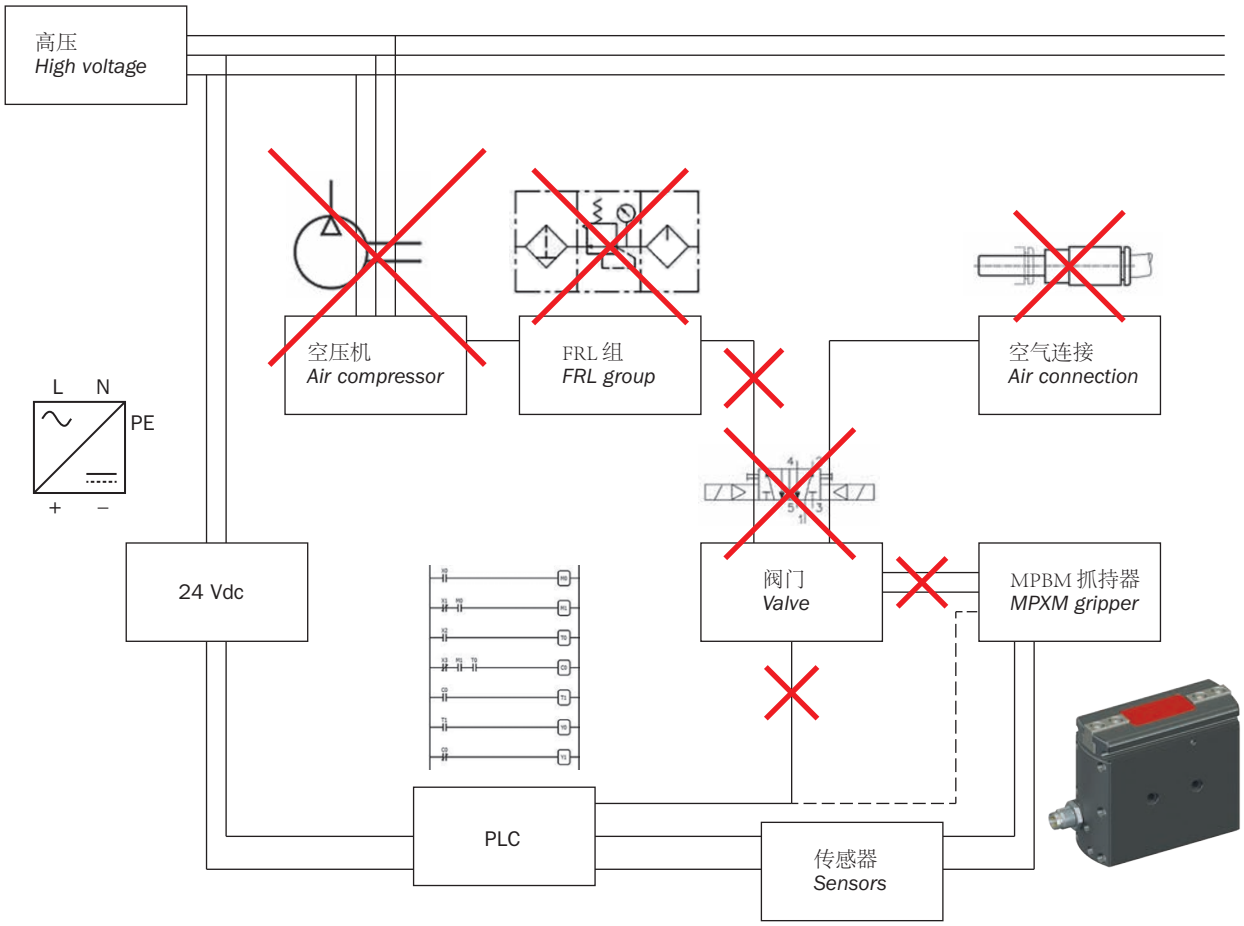

	MPXM1612	MPXM2516	MPXM3220
总抓持力 *Total gripping force*	68 N	95 N	215 N
行程 (±0.2 毫米) *Stroke*	2x6 mm	2x8 mm	2x10 mm
30° C 环境温度频率 *Frequency at an ambient temperature of 30°C*	0.75 Hz	1.2 Hz	0.85 Hz
颚式钳关闭时间 *Jaw closing time*	0.21 s	0.19 s	0.23 s
抓持器工作时间 *Working gripper time*	0.3 s	0.28 s	0.3 s
30° C 环境温度负载循环 *Duty cycle at an ambient temperature of 30°C*	45%	68%	51%
电源 *Power supply*	24 Vdc ±10%	24 Vdc ±10%	24 Vdc ±10%
峰值电流 *Peak current*	0.9 Apk	1.2 Apk	3.8 Apk
标称电流 *Nominal current*	0.3 Arms	0.4 Arms	0.8 Arms
无电刷电机功率 *Brushless motor power*	6 W	11 W	23 W
连接 *Connection*	M8 - 3极 *M8 - 3 poles*		
打开/关闭输入信号 *Open/closed input signal*	PNP 开路集电极 *PNP open collector*		
重复精确度 *Repetition accuracy*	0.02 mm	0.02 mm	0.02 mm
运行温度 *Operating temperature*	5° ÷ 60°C	5° ÷ 60°C	5° ÷ 60°C
环境防护等级 *Environmental Degree*	IP60	IP60	IP60
噪音水平 *Noise level*	< 70 dB	< 70 dB	< 70 dB
质量（包括电机） *Mass (motor included)*	184 g	390 g	604 g
IPA 洁净室认证 *IPA Clean Room Certification*	-	-	-
参考标准 *Reference standards*	EN 61000-6-2 + EC + IS1; EN 61000-6-3 + A1		
重心转动惯量 Jxx *Barycentric moment of inertia*	0.55 $kgcm^2$	2.02 $kgcm^2$	3.99 $kgcm^2$
重心转动惯量 Jyy *Barycentric moment of inertia*	0.93 $kgcm^2$	3.18 $kgcm^2$	6.69 $kgcm^2$
重心转动惯量 Jzz *Barycentric moment of inertia*	0.55 $kgcm^2$	1.76 $kgcm^2$	3.78 $kgcm^2$

抓持力

本电动抓持器可用于外部或内部抓持应用。
部件将被抓持在颚式钳行程内的任意位置。
抓持部件后，弹簧力将固定部件
（电机关闭和零消耗）。
即使停电。
另外，即使停电，抓持器机构也不可逆转。
因此，请勿尝试手动打开或关闭抓持器。

Gripping force

This electric gripper can be used for either external or internal gripping applications.
The part will be gripped in any position within the jaw stroke.
After the part is gripped, the spring force will hold the part (motor OFF and ZERO consumption).
Even in case of power black-out.
Furthermore the gripper mechanism is irreversible, even without power supply.
So do not attempt to open or close the gripper manually.

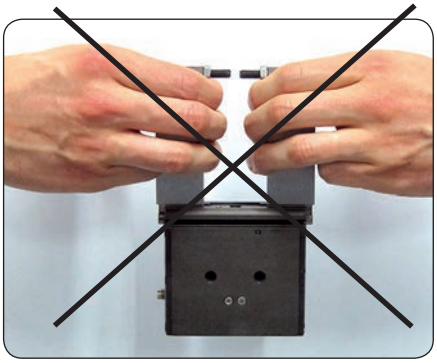

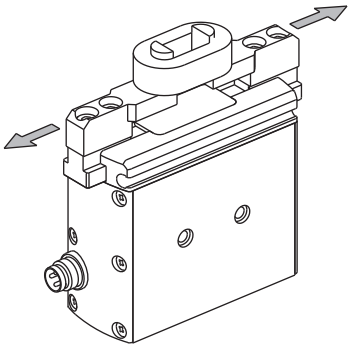

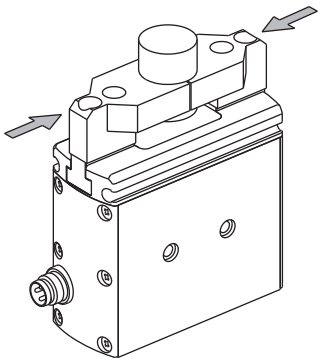

图形以抓持工具长度 Z 和伸出长度 X 为函数显示每个颚式钳的抓持力。

The graphs show the gripping force on each jaw, as a function of the gripping tool length Z and the overhanging X.

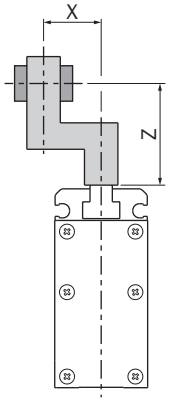

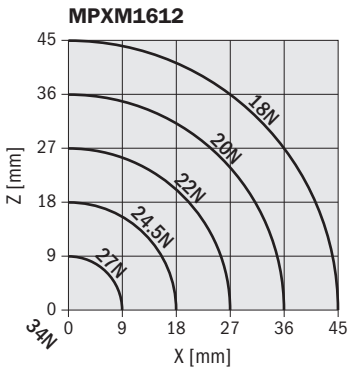

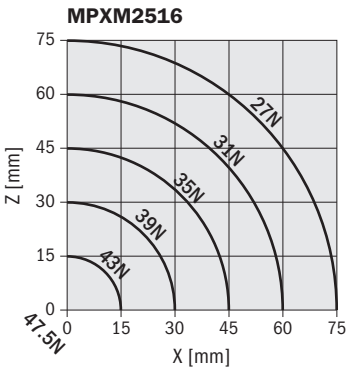

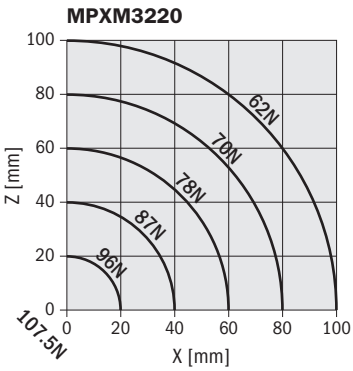

尺寸（毫米）
Dimensions (mm)

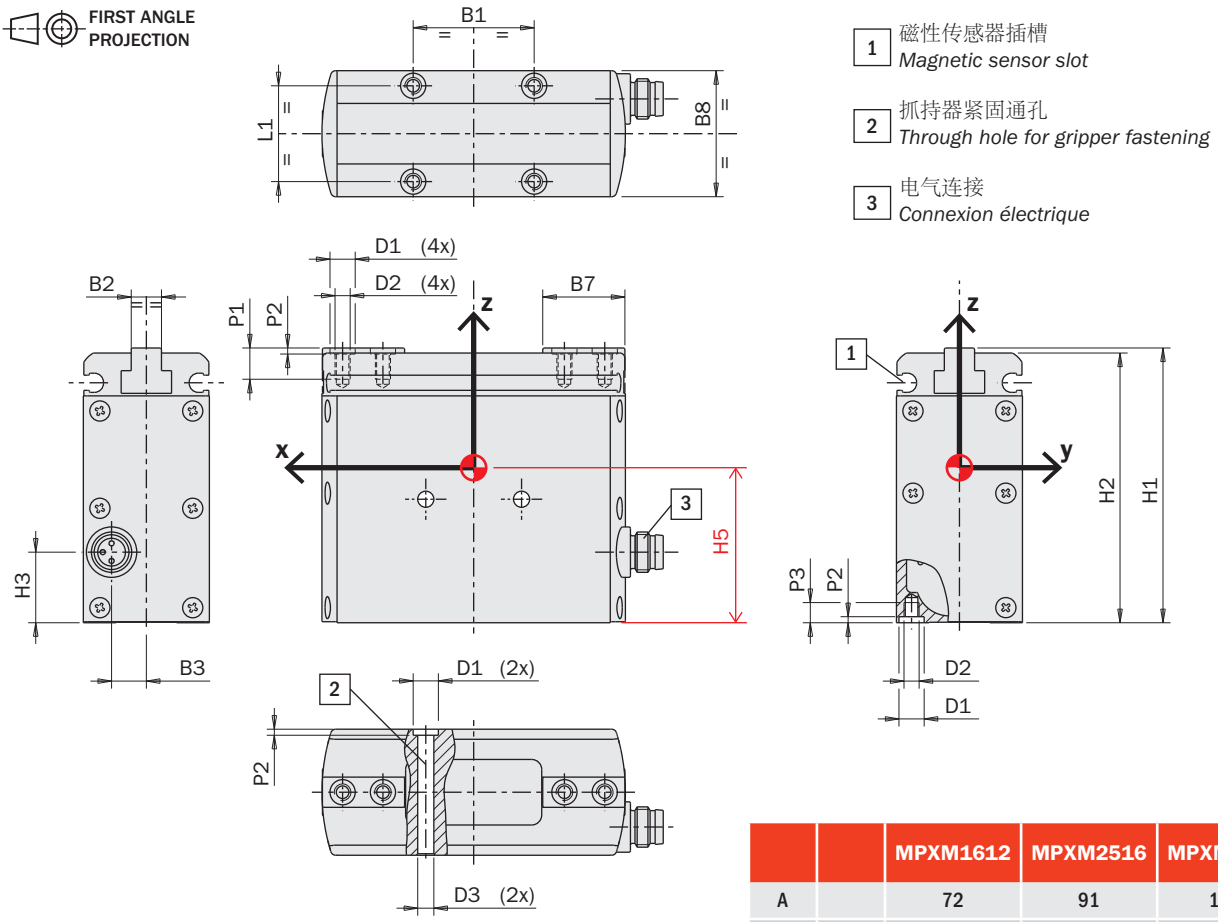

1 磁性传感器插槽
Magnetic sensor slot

2 抓持器紧固通孔
Through hole for gripper fastening

3 电气连接
Connexion électrique

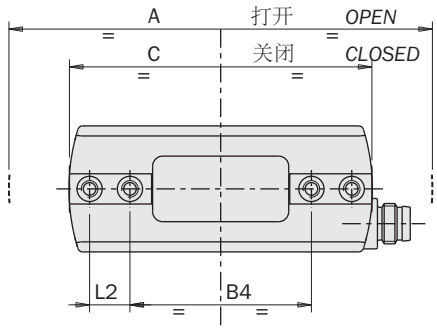

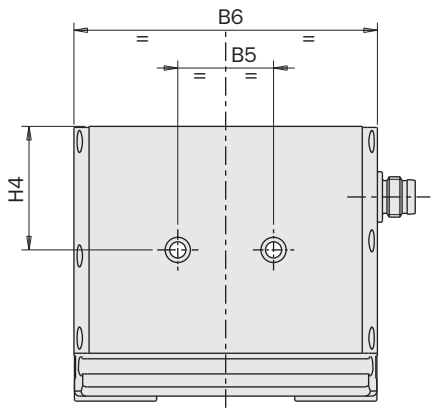

		MPXM1612	MPXM2516	MPXM3220
A		72	91	109
B1	±0.02	24	30	36
B2		6	8	9
B3		6.9	10	11
B4		36	41	48
B5	±0.02	19	25	30
B6		62.2	75	89
B7		16.3	22.5	28
B8		25	32	35
C		60	75	89
D1		Ø5 H8	Ø7 H8	Ø7 H8
D2		M3	M4	M5
D3		Ø3.2	Ø4.2	Ø5.2
H1		54.5	71	81
H2		53.5	70	80
H3		14	17	19
H4	±0.02	24.5	32	38
H5		32.3	42.6	48.4
L1	±0.02	19	24	26
L2	±0.02	8	12	14
P1		6.2	8	8.5
P2	+0.1	1.2	1.5	1.5
P3		4	7	8

电气连接

带有 3 极的 M8 标准连接器可以提供 24 伏直流电源以及关闭/打开信号 (ON/OFF)。

不需要其它电子部件驱动抓持器。

Electrical connection

It is possible to provide the power supply at 24Vdc and the and the closing/opening signal (ON/OFF) by the M8 standard connector with 3 poles.

No further electronics is necessary to drive the gripper.

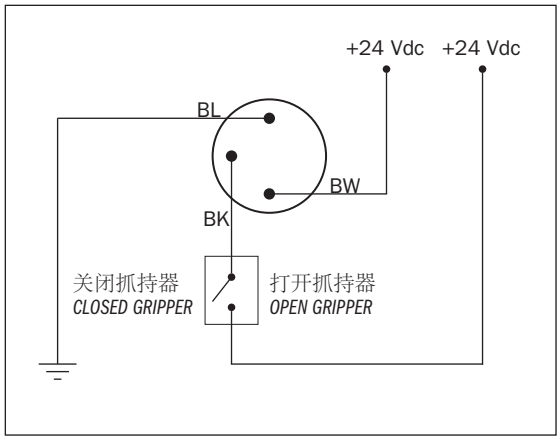

可选 M8x1 标准阴性连接器。
Gimatic 代码： CFGM800325P / CFGM890325P。

Optional M8x1 standard female connector.
Gimatic code: CFGM800325P / CFGM890325P.

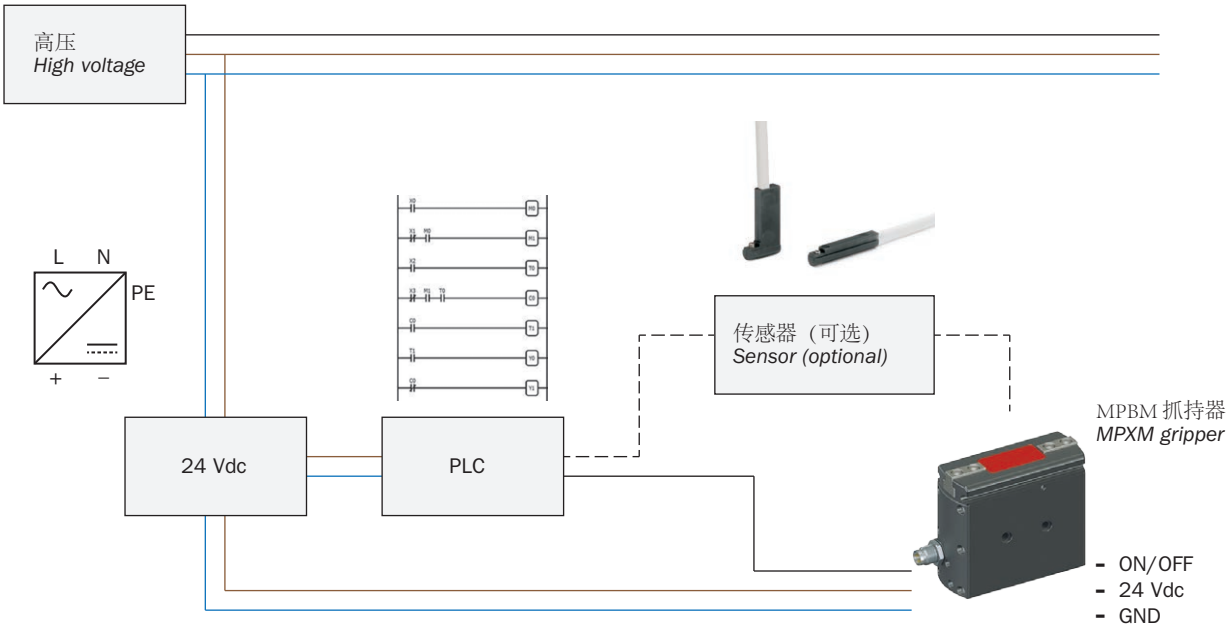

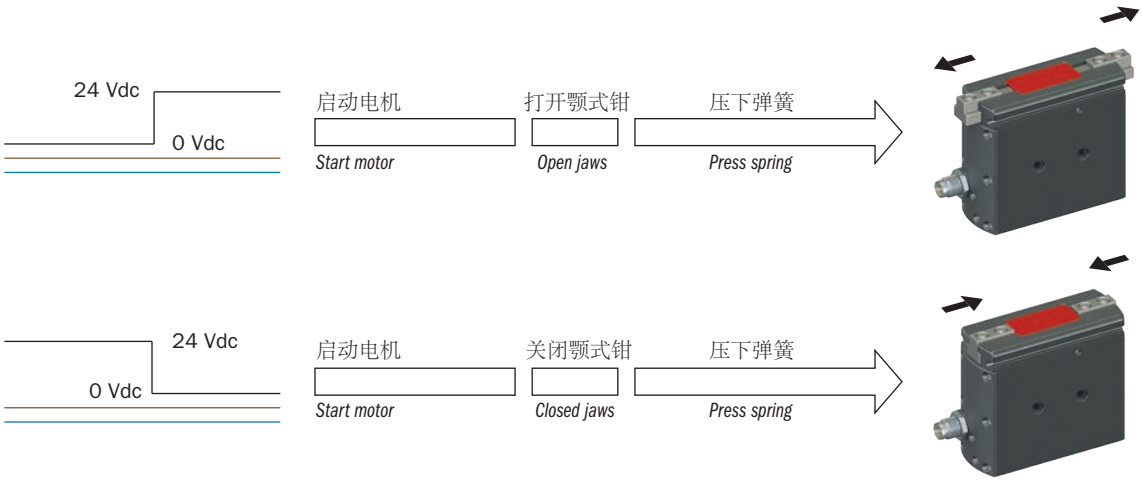

传感器

通过内部颚式钳上的磁体检测位置的一个或多个磁性传感器（可选）可以检查运行位置。
有关详细信息，请参见“附件”部分。

Sensors

The operating position can be checked by one or more magnetic sensors (optional), that detect the position by the magnets on the jaws inside.
For details, see the "Accessories" section.

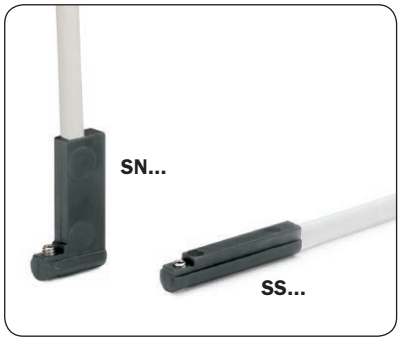

它们均提供了 3 线扁平线缆和一个 LED 灯。

They are all provided with a 3-wire flat cable and a LED.

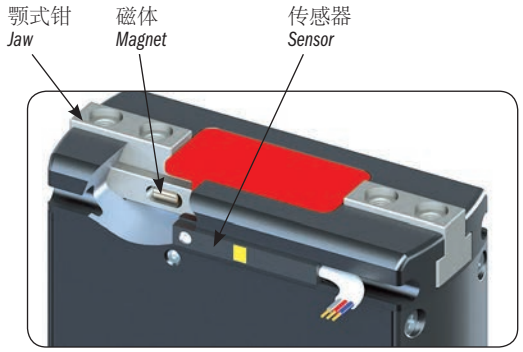

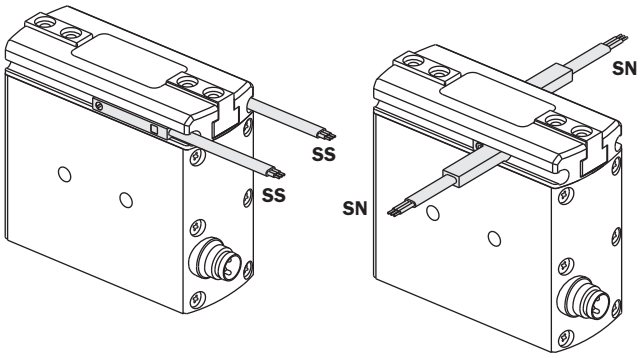

安全负载

检查表中的最大允许负载。
力度或扭矩过大会损坏抓持器，引起运行问题以及危及操作人员的安全。
F s、Mx s、My s、Mz s 为配有静止颚式钳的静态条件下的最大允许负载。
F d、Mx d、My d、Mz d 为配有运行颚式钳的动态条件下的最大允许负载。
下表也显示抓持器在峰值性能运行时每个抓持工具上的最大允许负载 (m)。

Safety loads

Check the table for the maximum permitted loads.
Excessive forces or torques can damage the gripper, cause operation problems and endanger the safety of the operator.
F s, Mx s, My s, Mz s, are the maximum permitted loads under static conditions, that is with motionless jaws.
F d, Mx d, My d, Mz d, are the maximum permitted loads under dynamic conditions, that is with running jaws.
The following table also shows the maximum permitted load (m) on each gripping tool when the gripper operates at peak performance.

	MPXM1612	MPXM2516	MPXM3220
F s	60 N	120 N	200 N
Mx s	3 Nm	8 Nm	20 Nm
My s	3 Nm	8 Nm	20 Nm
Mz s	3 Nm	8 Nm	20 Nm
F d	0.6 N	1.2 N	2 N
Mx d	3 Ncm	8 Ncm	20 Ncm
My d	3 Ncm	8 Ncm	20 Ncm
Mz d	3 Ncm	8 Ncm	20 Ncm
m	60 g	120 g	200 g
Z	45 mm	65 mm	90 mm

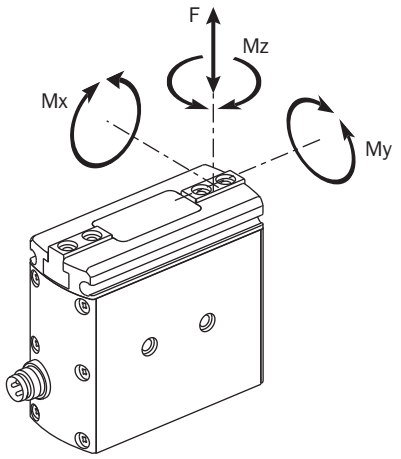

紧固抓持器

抓持器可以紧固到静态或移动部件上。
位于移动部件上时，必须注意承受抓持器及其负载的惯性力。

- 要将抓持器紧固到底座上，使用通过安装板旋入抓持器内的四个螺丝 (SA)。
- 要紧固抓持器侧部，使用通孔 (D3) 内的两个螺丝 (SB)。

在每种情况下，放置包装内提供的两个对中衬套 (BA)。检查表中安装板内其外罩的尺寸（DA 和 PA）。

Gripper fastening

The gripper can be fastened to a static or moving part.
When on a moving part, you must pay attention to the inertial force to which the gripper and its load are subjected.

- *To fasten gripper to base, use four screws (SA) through the mounting plate, screwed in the gripper.*
- *To fasten the gripper side, use two screws (SB) in the through holes (D3).*

In every case, put the two centering sleeves (BA), which are supplied in the package. Check the dimensions (DA and PA) in the table for their housings in the mounting plate.

	MPXM1612	MPXM2516	MPXM3220
B8	25	32	35
D3	Ø3.2	Ø4.2	Ø5.2
DA	Ø5 h7	Ø7 h7	Ø7 h7
P3	4	7	8
PA	1.2	1.5	1.5
SA	M3	M4	M5
SB	M3	M4	M5

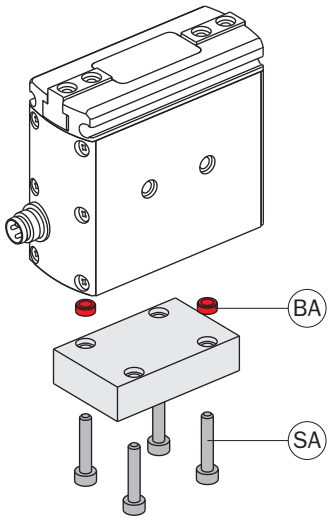

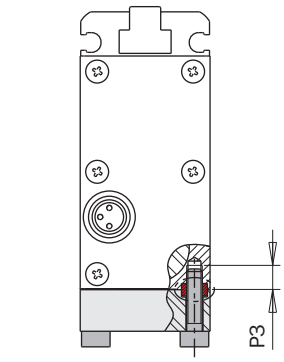

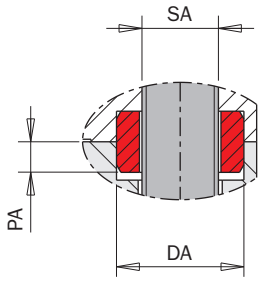

包装内提供用于抓持工具的 4 个对中环 (BA) 和用于外罩的 2 个对中衬套 (BA)。

4 centering rings (BA) for the gripping tools and 2 centering sleeves (BA) for the housing are supplied in the packaging.

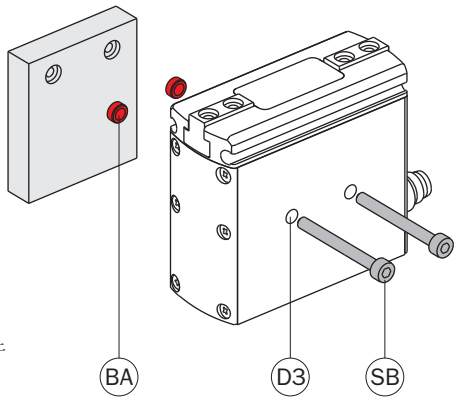

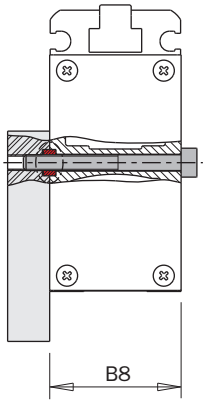

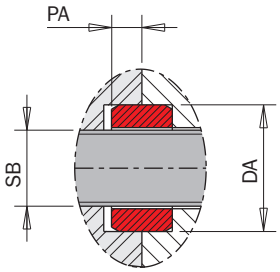

紧固抓持工具

抓持工具必须尽可能短而轻。
必须采用颚式钳校准孔 (D1) 内的两个螺丝 (SC) 和两个对中衬套 (BA) 对其进行紧固。

Gripping tool fastening

The gripping tools must be as short and light as possible. They must be fastened by two screws (SC) and two centering sleeves (BA) in the calibrated holes (D1) of the jaws.

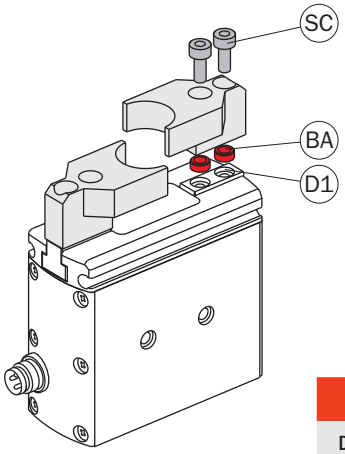

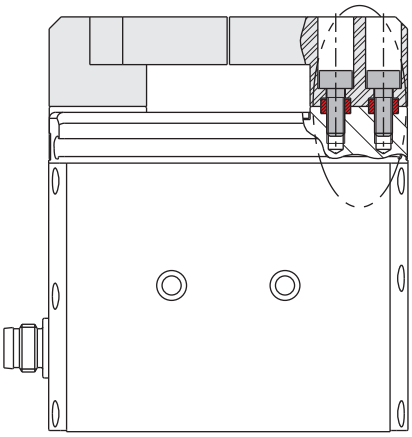

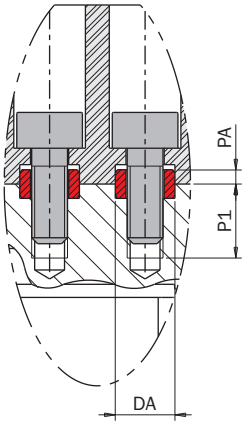

	MPXM1612	MPXM2516	MPXM3220
DA	Ø5 h7	Ø7 h7	Ø7 h7
P1	6.2	8	8.5
PA	1.2	1.5	1.5
SC	M3	M4	M5

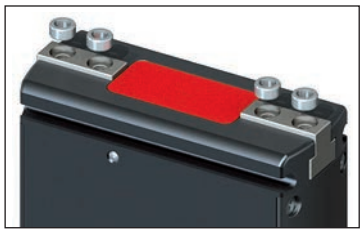

系列兼容性

MPBM 系列抓持器完美兼容 MRE 系列旋转执行器，无需使用任何特殊板。

Serie compatibility

MPXM grippers series is perfectly compatible with MRE rotary series actuators without any special plate.

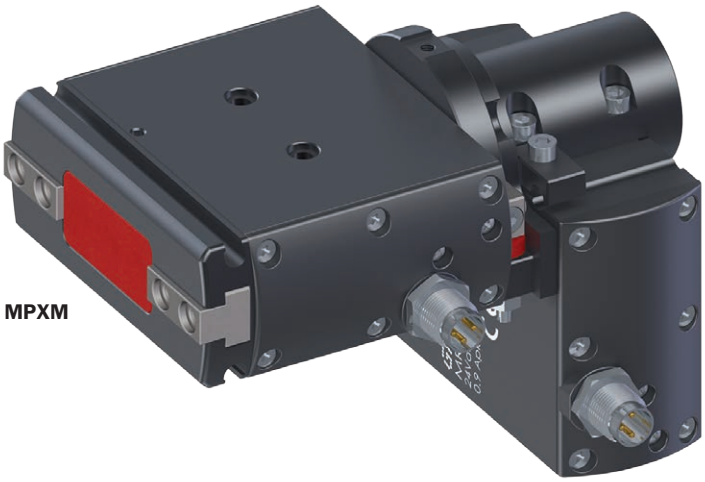

带有 2 个颚式钳的自对中长行程电动平行抓持器

- 即插即用用户友好型抓持器。
- 抓持器啮合时不耗电。
- 不要求编程。
- 停电时保证保持抓持器。
- 自适应颚式部件。
- 长寿型无电刷电机（无电刷直流电机）。
- 内置式电机驱动器。
- 24 伏直流低压电源。
- M8x1 3 极标准连接。
- PLC 作为气动阀可控。
- 不包括自对中系统。
- 纤维碳齿轮减速。
- 1000 万周期免维护。
- 用于重型负载的 T 型槽式颚式钳。
- 最佳平衡重量、尺寸和力度。
- 兼容旋转执行器接头。
- 可选磁性传感器。

Self-centering 2-jaw electric parallel gripper with long stroke

- *Plug & play user friendly gripper.*
- *No electricity consumption when gripper is engaged.*
- *No programming required.*
- *Gripper retention guaranteed in event of blackout.*
- *Self Adapting jaws part.*
- *Long life Brushless motor (Brushless DC).*
- *Built-in motor driver.*
- *24 Vdc Low Voltage Power Supply.*
- *M8x1, 3 poles standard connection.*
- *Controllable by PLC as a pneumatic valve.*
- *Exclusive self-centering system.*
- *Fiber-carbon gear reduction.*
- *10 milion cycle maintenance-free.*
- *T-slot syle jaws for heavy loads.*
- *Weight-dimensions-force best trade off.*
- *Rotary actuator fitting compatible.*
- *Optional magnetic sensors.*

MPLM1630

MPLM2535

MPLM3240

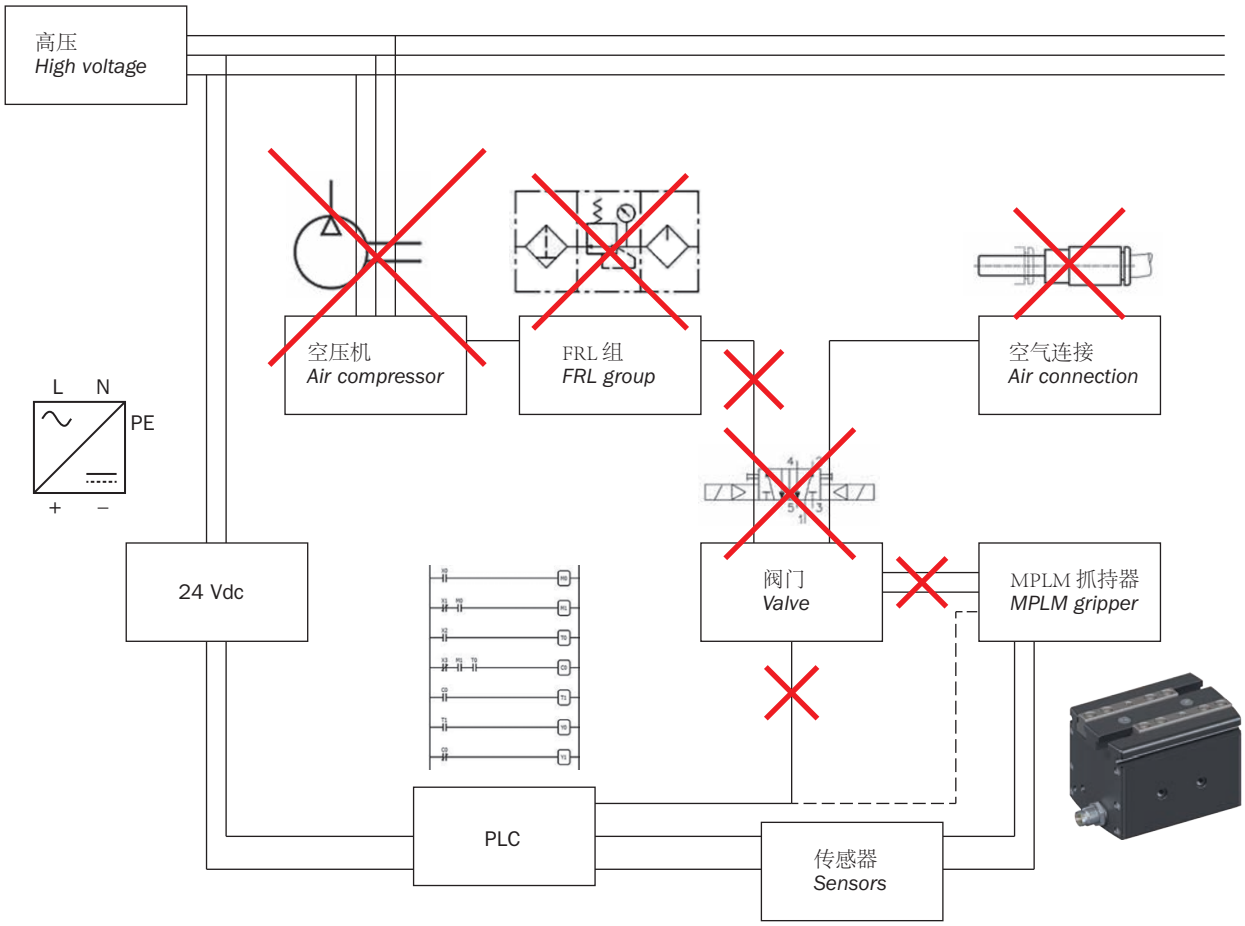

	MPLM1630	MPLM2535	MPLM3240
总抓持力 *Total gripping force*	63 N	98 N	210 N
行程 (±0.3 毫米) *Stroke*	2x15 mm	2x17.5 mm	2x20 mm
30° C 环境温度频率 *Frequency at an ambient temperature of 30°C*	0.51 Hz	0.93 Hz	0.70 Hz
颚式钳关闭时间 *Jaw closing time*	0.37 s	0.42 s	0.50 s
抓持器工作时间 *Working gripper time*	0.52 s	0.53 s	0.53 s
30° C 环境温度负载循环 *Duty cycle at an ambient temperature of 30°C*	54%	100%	74%
电源 *Power supply*	24 Vdc ±10%	24 Vdc ±10%	24 Vdc ±10%
峰值电流 *Peak current*	0.9 Apk	1.2 Apk	3.8 Apk
标称电流 *Nominal current*	0.3 Arms	0.4 Arms	0.8 Arms
无电刷电机功率 *Brushless motor power*	6 W	11 W	23 W
连接 *Connection*	M8 – 3 极 *M8 - 3 poles*	M8 – 3 极 *M8 - 3 poles*	M8 – 3 极 *M8 - 3 poles*
打开/关闭输入信号 *Open/closed input signal*	PNP 开路集电极 *PNP open collector*	PNP 开路集电极 *PNP open collector*	PNP 开路集电极 *PNP open collector*
重复精确度 *Repetition accuracy*	0.02 mm	0.02 mm	0.02 mm
运行温度 *Operating temperature*	5° ÷ 60°C	5° ÷ 60°C	5° ÷ 60°C
环境防护等级 *Environmntal Degree*	IP54	IP54	IP54
噪音水平 *Noise level*	< 70 dB	< 70 dB	< 70 dB
质量（包括电机） *Mass (motor included)*	263 g	500 g	844 g
IPA 洁净室认证 *IPA Clean Room Certification*	-	-	-
参考标准 *Reference standards*	EN 61000-6-2 + EC + IS1; EN 61000-6-3 + A1		
重心转动惯量 Jxx *Barycentric moment of inertia*	0.82 $kgcm^2$	2.32 $kgcm^2$	5.1 $kgcm^2$
重心转动惯量 Jyy *Barycentric moment of inertia*	1.07 $kgcm^2$	3.03 $kgcm^2$	6.97 $kgcm^2$
重心转动惯量 Jzz *Barycentric moment of inertia*	0.98 $kgcm^2$	2.96 $kgcm^2$	6.79 $kgcm^2$

抓持力

本电动抓持器可用于外部或内部抓持应用。
部件将被抓持在颚式钳行程内的任意位置。
抓持部件后，弹簧力将固定部件
（电机关闭和零消耗）。
即使停电。
另外，即使停电，抓持器机构也不可逆转。
因此，请勿尝试手动打开或关闭抓持器。

Gripping force

This electric gripper can be used for either external or internal gripping applications.
The part will be gripped in any position within the jaw stroke.
After the part is gripped, the spring force will hold the part (motor OFF and ZERO consumption).
Even in case of power black-out.
Furthermore the gripper mechanism is irreversible, even without power supply.
So do not attempt to open or close the gripper manually.

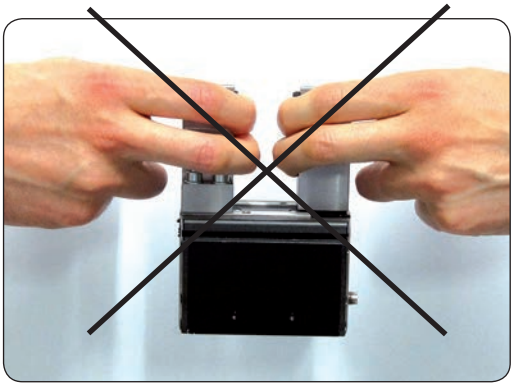

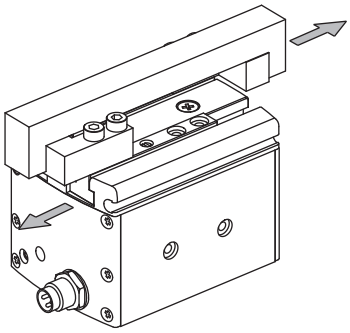

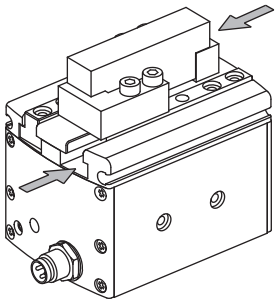

图形以抓持工具长度 Z 和伸出长度 X 为函数显示每个颚式钳的抓持力。

The graphs show the gripping force on each jaw, as a function of the gripping tool length Z and the overhanging X.

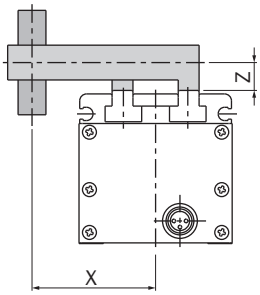

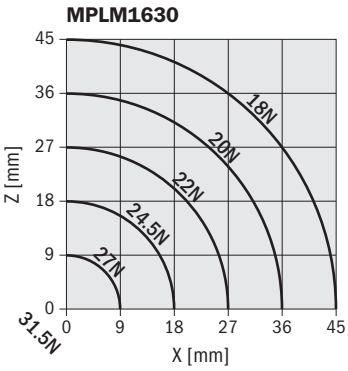

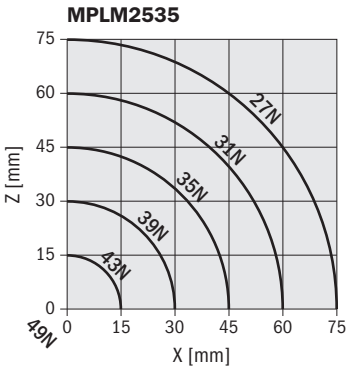

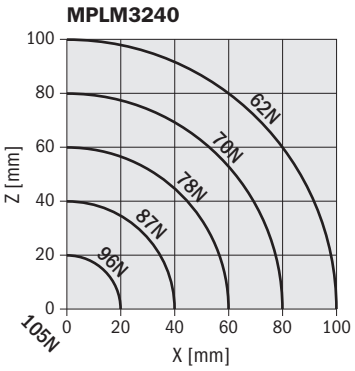

尺寸（毫米）
Dimensions (mm)

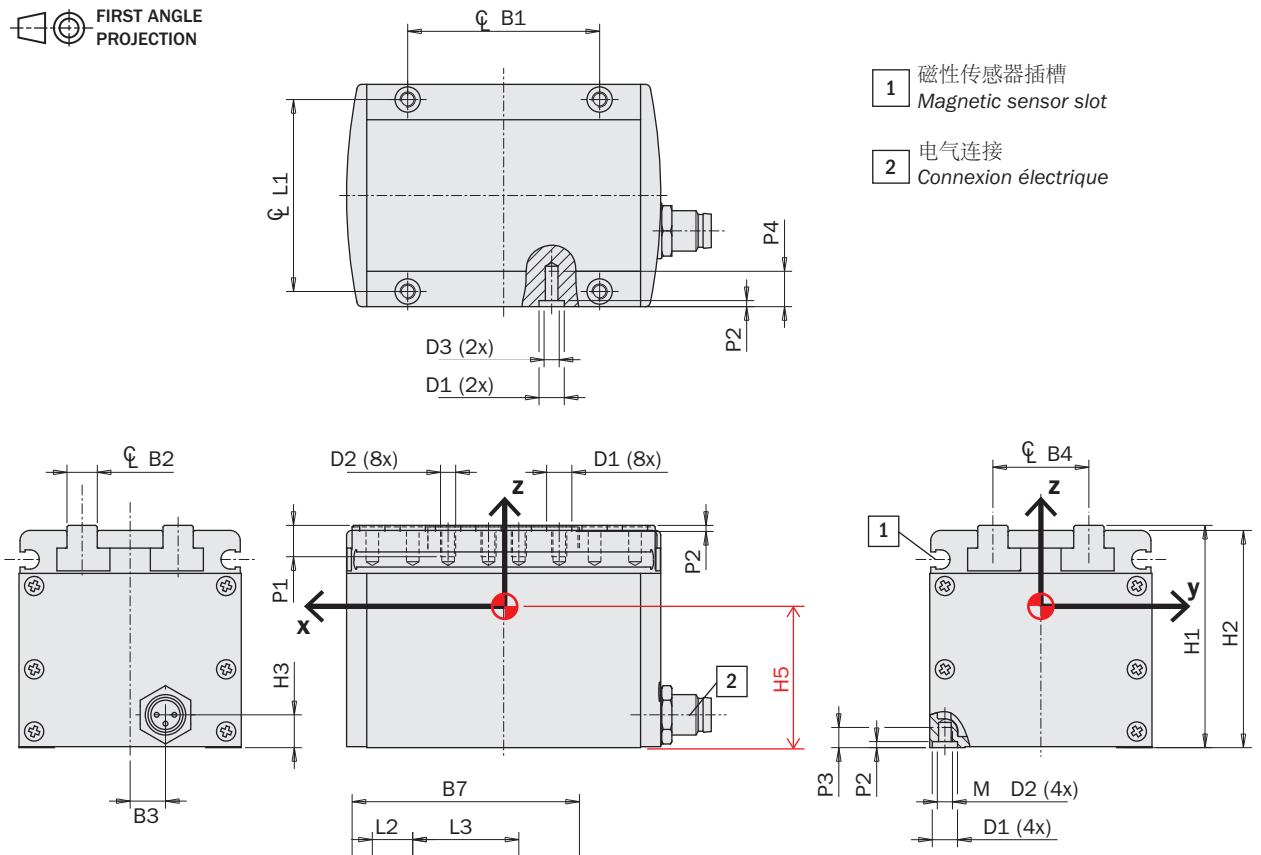

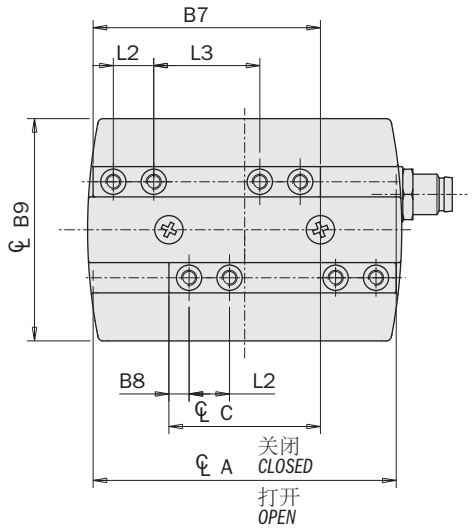

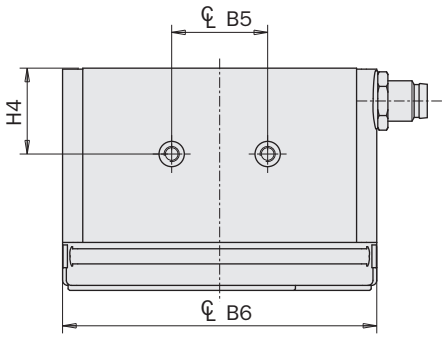

		MPLM1630	MPLM2535	MPLM3240
A		60	74	88
B1	±0.02	38	45	54
B2		6	8	9
B3		7	17	15
B4		19	23	28
B5	±0.02	19	25	30
B6		62.2	77	91
B7		45	56.5	68
B8		4	5	6.5
B9		44	54	62
C		30	39	48
D1		Ø5 H8	Ø7 H8	Ø7 H8
D2		M3	M4	M5
H1		44	54	62
H2		43	53	61
H3		6.5	11.7	9.5
H4	±0.02	17	19.5	23
H5		26.6	32.2	36.7
L1	±0.02	38	45	54
L2	±0.02	8	12	14
P1		6.2	8	8.5
P2	+0.1	1.2	1.5	1.5
P3		4	6	8
P4		7	6	14

电气连接

带有 3 极的 M8 标准连接器可以提供 24 伏直流电源以及关闭/打开信号 (ON/OFF)。

不需要其它电子部件驱动抓持器。

Electrical connection

It is possible to provide the power supply at 24Vdc and the and the closing/opening signal (ON/OFF) by the M8 standard connector with 3 poles.

No further electronics is necessary to drive the gripper.

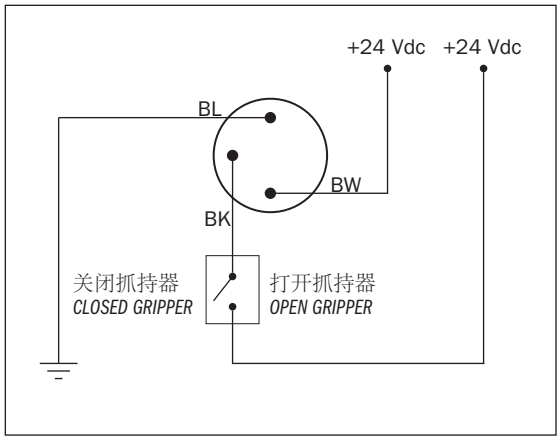

可选 M8x1 标准阴性连接器。
Gimatic 代码： CFGM800325P / CFGM890325P。

Optional M8x1 standard female connector.
Gimatic code: CFGM800325P / CFGM890325P.

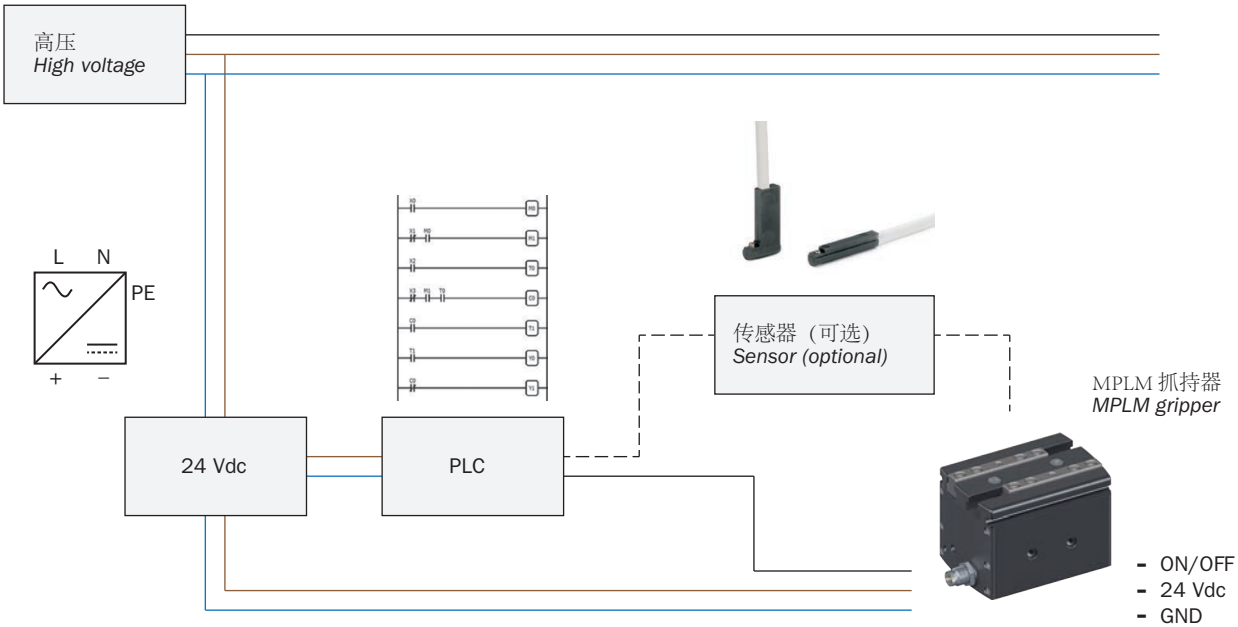

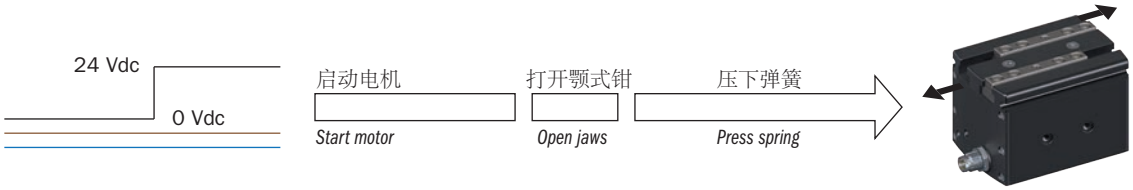

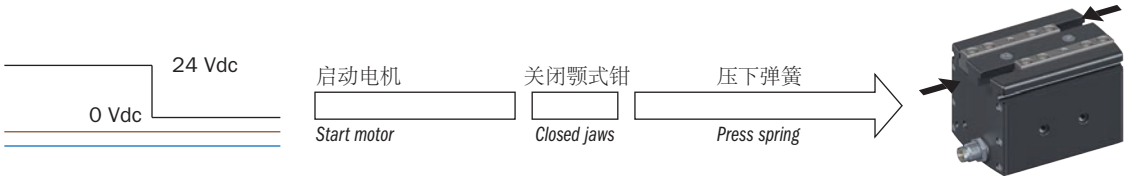

传感器

通过内部颚式钳上的磁体检测位置的一个或多个磁性传感器（可选）可以检查运行位置。
有关详细信息，请参见“附件”部分。

Sensors

The operating position can be checked by one or more magnetic sensors (optional), that detect the position by the magnets on the jaws inside.
For details, see the "Accessories" section.

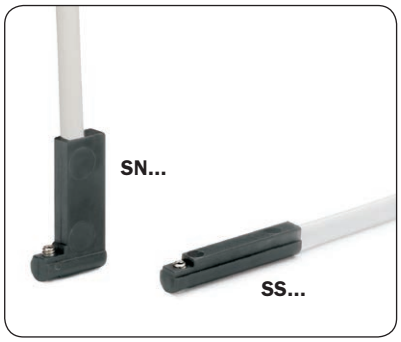

它们均提供了 3 线扁平线缆和一个 LED 灯。

They are all provided with a 3-wire flat cable and a LED.

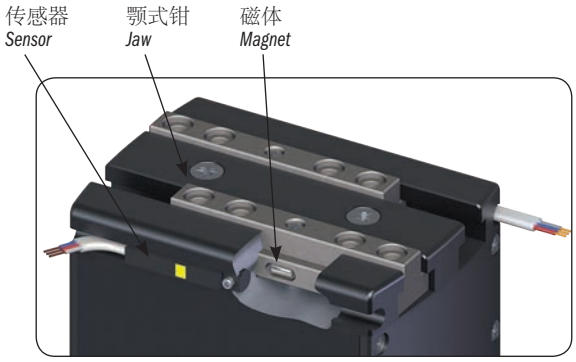

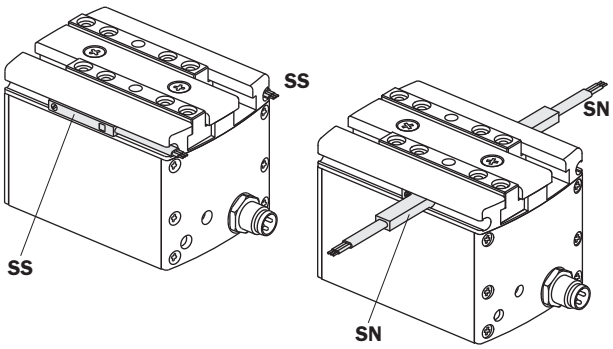

安全负载

检查表中的最大允许负载。
力度或扭矩过大会损坏抓持器，引起运行问题以及危及操作人员的安全。
F s、Mx s、My s、Mz s 为配有静止颚式钳的静态条件下的最大允许负载。
F d、Mx d、My d、Mz d 为配有运行颚式钳的动态条件下的最大允许负载。
下表也显示抓持器在峰值性能运行时每个抓持工具上的最大允许负载 (m)。

Safety loads

Check the table for the maximum permitted loads.
Excessive forces or torques can damage the gripper, cause operation problems and endanger the safety of the operator.
F s, Mx s, My s, Mz s, are the maximum permitted loads under static conditions, that is with motionless jaws.
F d, Mx d, My d, Mz d, are the maximum permitted loads under dynamic conditions, that is with running jaws.
The following table also shows the maximum permitted load (m) on each gripping tool when the gripper operates at peak performance.

	MPLM1630	MPLM2535	MPLM3240
F s	60 N	120 N	180 N
Mx s	3 Nm	8 Nm	20 Nm
My s	3 Nm	8 Nm	20 Nm
Mz s	3 Nm	8 Nm	20 Nm
F d	0.6 N	1.2 N	2 N
Mx d	3 Ncm	8 Ncm	20 Ncm
My d	3 Ncm	8 Ncm	20 Ncm
Mz d	3 Ncm	8 Ncm	20 Ncm
m	60 g	120 g	200 g
Z	45 mm	65 mm	90 mm

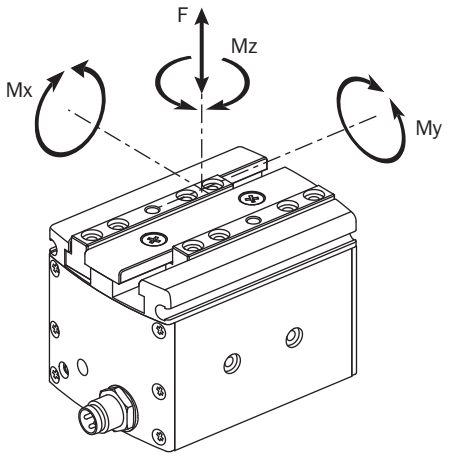

紧固抓持器

抓持器可以紧固到静态或移动部件上。
位于移动部件上时，必须注意承受抓持器及其负载的惯性力。

- 要将抓持器紧固到底座上，使用通过安装板旋入抓持器内的四个螺丝 (SA)。
- 要将抓持器紧固到其侧部，用两个螺丝 (SB) 穿过安装板并拧入抓持器。

在每种情况下，放置包装内提供的两个对中衬套 (BA)。检查表中安装板内其外罩的尺寸（DA 和 PA）。

Gripper fastening

The gripper can be fastened to a static or moving part.
When on a moving part, you must pay attention to the inertial force to which the gripper and its load are subjected.

- *To fasten gripper to base, use four screws (SA) through the mounting plate, screwed in the gripper.*
- *To fasten the gripper on its side, use two screws (SB) passing through the mounting plate and screw in the gripper.*

In every case, put the two centering sleeves (BA), which are supplied in the package. Check the dimensions (DA and PA) in the table for their housings in the mounting plate.

	MPLM1630	MPLM2535	MPLM3240
DA	Ø5 h7	Ø7 h7	Ø7 h7
PA	1.2	1.5	1.5
P3	4	6	8
P4	7	6	14
SA	M3	M4	M5
SB	M3	M4	M5

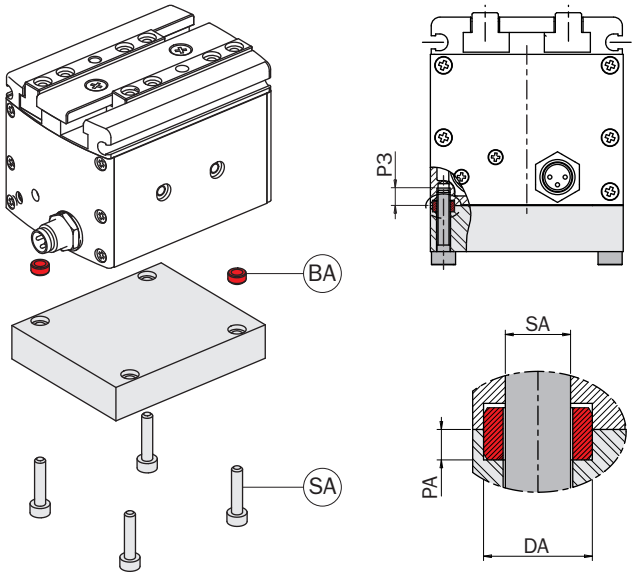

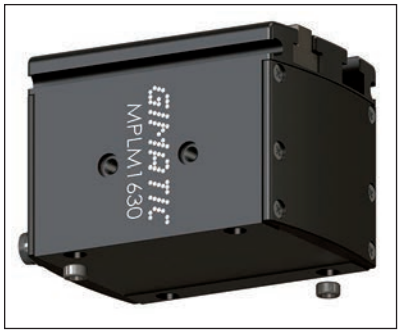

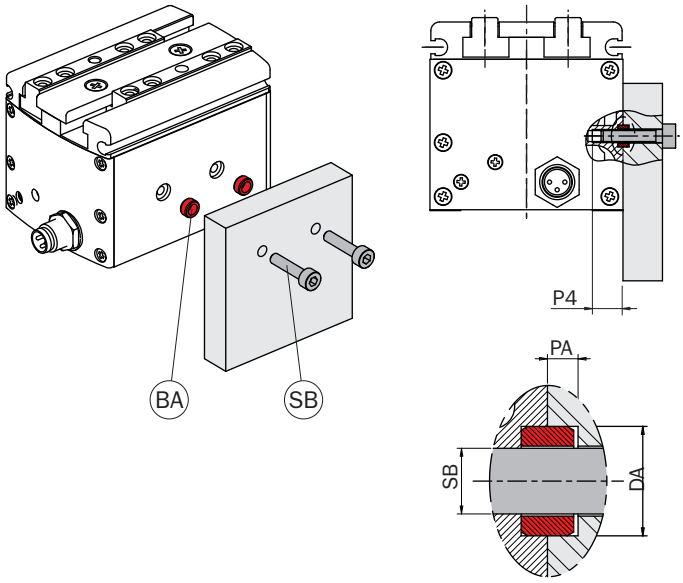

包装内提供用于抓持工具的 4 个对中环 (BA) 和用于外罩的 2 个对中衬套 (BA)。

4 centering rings (BA) for the gripping tools and 2 centering sleeves (BA) for the housing are supplied in the packaging.

紧固抓持工具

抓持工具必须尽可能短而轻。
必须采用颚式钳校准孔 (D1) 内的两个螺丝 (SC) 和两个对中衬套 (BA) 对其进行紧固。

Gripping tool fastening

The gripping tools must be as short and light as possible. They must be fastened by two screws (SC) and two centering sleeves (BA) in the calibrated holes (D1) of the jaws.

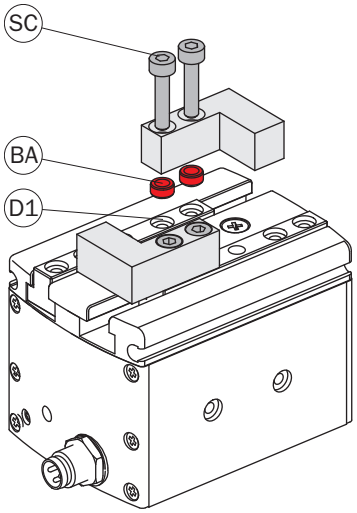

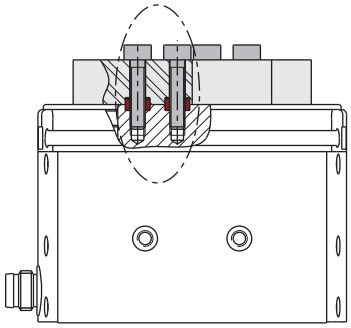

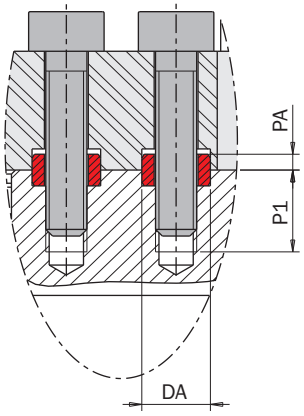

	MPLM1630	MPLM2535	MPLM3240
DA	Ø5 h7	Ø7 h7	Ø7 h7
P1	6.2	8	8.5
PA	1.2	1.5	1.5
SC	M3	M4	M5

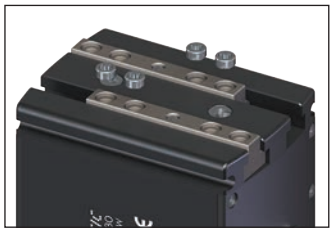

系列兼容性

MPLM 系列通过可选紧固板兼容 MRE 系列的旋转执行器。

Serie compatibility

The MPLM series is compatible with the rotary actuators of the MRE series through the optional fastening plate.

MPLM

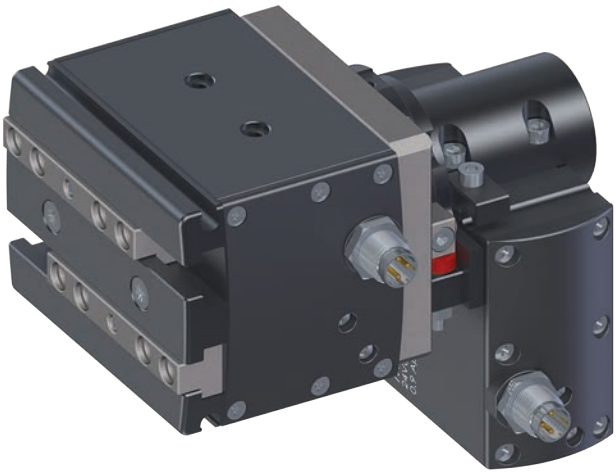

MRE

带有 3 个颚式钳的平行自对中电动抓持器

- 即插即用用户友好型抓持器。
- 抓持器啮合时不耗电。
- 不要求编程。
- 停电时保证保持抓持器。
- 自适应颚式部件。
- 长寿型无电刷电机（无电刷直流电机）。
- 内置式电机驱动器。
- 24 伏直流低压电源。
- M8x1 3 极标准连接。
- PLC 作为气动阀可控。
- 不包括自对中系统。
- 纤维碳齿轮减速。
- 1000 万周期免维护。
- 用于重型负载的 T 型槽式颚式钳。
- 最佳平衡重量、尺寸和力度。
- 兼容旋转执行器接头。
- 可选磁性传感器。

3-jaw parallel self-centering electric gripper

- *Plug & play user friendly gripper.*
- *No electricity consumption when gripper is engaged.*
- *No programming required.*
- *Gripper retention guaranteed in event of blackout.*
- *Self Adapting jaws part.*
- *Long life Brushless motor (Brushless DC).*
- *Built-in motor driver.*
- *24 Vdc Low Voltage Power Supply.*
- *M8x1, 3 poles standard connection.*
- *Controllable by PLC as a pneumatic valve.*
- *Exclusive self-centering system.*
- *Fiber-carbon gear reduction.*
- *10 milion cycle maintenance-free.*
- *T-slot syle jaws for heavy loads.*
- *Weight-dimensions-force best trade off.*
- *Rotary actuator fitting compatible.*
- *Optional magnetic sensors.*

MPTM1606

MPTM2508

MPTM3210

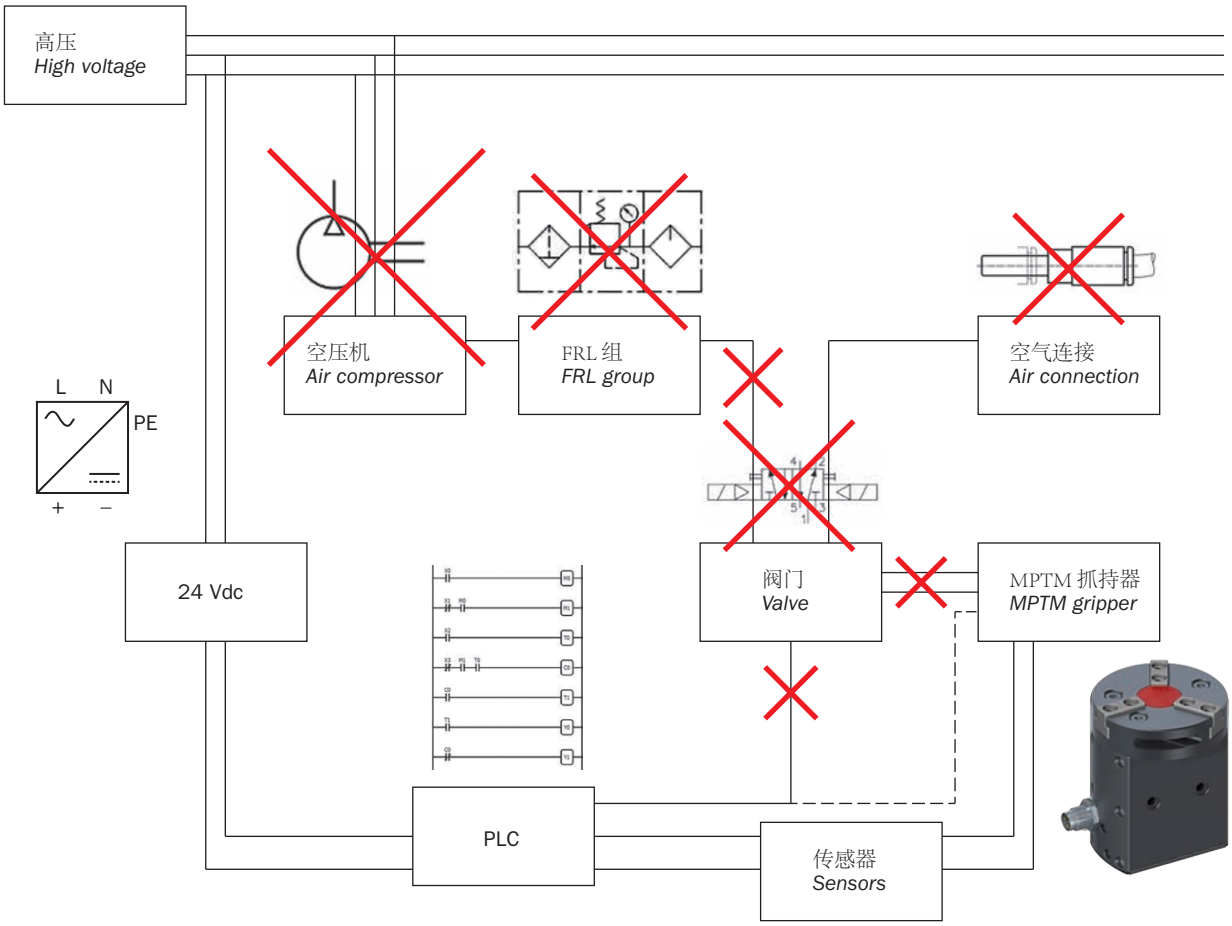

09/2016

	MPTM1606	MPTM2508	MPTM3210
总抓持力 *Total gripping force*	57 N	124 N	220 N
行程 （±0.2 毫米） *Stroke*	3x3 mm	3x4 mm	3x5 mm
30° C 环境温度频率 *Frequency at an ambient temperature of 30°C*	0.95 Hz	0.83 Hz	0.85 Hz
颚式钳关闭时间 *Jaw closing time*	0.08 s	0.12 s	0.16 s
抓持器工作时间 *Working gripper time*	0.19 s	0.31 s	0.26 s
30° C 环境温度负载循环 *Duty cycle at an ambient temperature of 30°C*	36%	52%	44%
电源 *Power supply*	24 Vdc ±10%	24 Vdc ±10%	24 Vdc ±10%
峰值电流 *Peak current*	0.9 Apk	1.2 Apk	3.8 Apk
标称电流 *Nominal current*	0.3 Arms	0.4 Arms	0.8 Arms
无电刷电机功率 *Brushless motor power*	6 W	11 W	23 W
连接 *Connection*	M8 – 3 极 *M8 - 3 poles*	M8 – 3 极 *M8 - 3 poles*	M8 – 3 极 *M8 - 3 poles*
打开/关闭输入信号 *Open/closed input signal*	PNP 开路集电极 *PNP open collector*	PNP 开路集电极 *PNP open collector*	PNP 开路集电极 *PNP open collector*
重复精确度 *Repetition accuracy*	0.02 mm	0.02 mm	0.02 mm
运行温度 *Operating temperature*	5° ÷ 60°C.	5° ÷ 60°C.	5° ÷ 60°C.
环境防护等级 *Environmntal Degree*	IP54	IP54	IP54
噪音水平 *Noise level*	< 70 dB	< 70 dB	< 70 dB
质量（包括电机） *Mass (motor included)*	183 g	430 g	693 g
ISO14644-1 洁净室认证 *ISO14644-1 Clean Room Certification*	CLASS 7	-	-
参考标准 *Reference standards*	EN 61000-6-2 + EC + IS1; EN 61000-6-3 + A1		
重心转动惯量 Jxx *Barycentric moment of inertia*	0.66 $kgcm^2$	2.75 $kgcm^2$	5.78 $kgcm^2$
重心转动惯量 Jyy *Barycentric moment of inertia*	0.75 $kgcm^2$	3.13 $kgcm^2$	6.89 $kgcm^2$
重心转动惯量 Jzz *Barycentric moment of inertia*	0.36 $kgcm^2$	1.6 $kgcm^2$	3.73 $kgcm^2$

抓持力

本电动抓持器可用于外部或内部抓持应用。
部件将被抓持在颚式钳行程内的任意位置。
抓持部件后，弹簧力将固定部件
（电机关闭和零消耗）。
即使停电。
另外，即使停电，抓持器机构也不可逆转。
因此，请勿尝试手动打开或关闭抓持器。

Gripping force

This electric gripper can be used for either external or internal gripping applications.
The part will be gripped in any position within the jaw stroke.
After the part is gripped, the spring force will hold the part (motor OFF and ZERO consumption).
Even in case of power black-out.
Furthermore the gripper mechanism is irreversible, even without power supply.
So do not attempt to open or close the gripper manually.

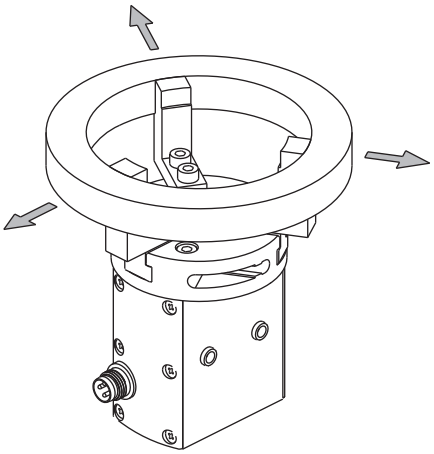

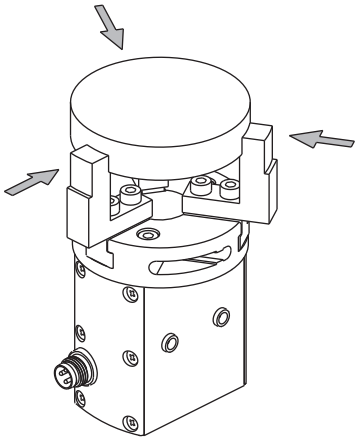

图形以抓持工具长度 Z 为函数显示每个颚式钳的抓持力。

The graphs show the gripping force on each jaw, as a function of the gripping tool length Z.

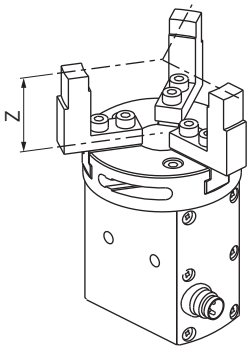

MPTM1606

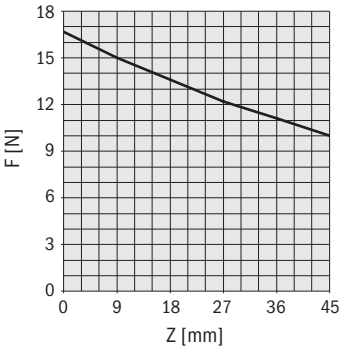

MPTM2508

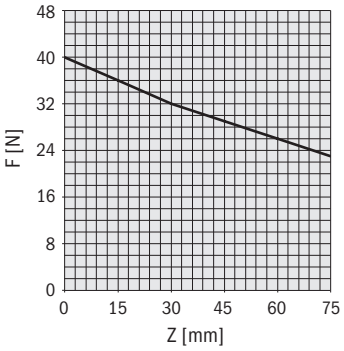

MPTM3210

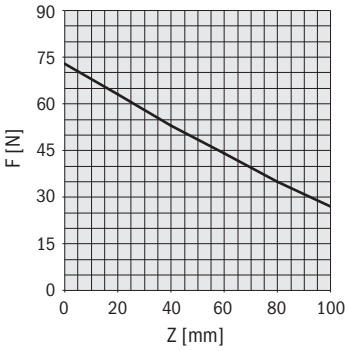

尺寸（毫米）
Dimensions (mm)

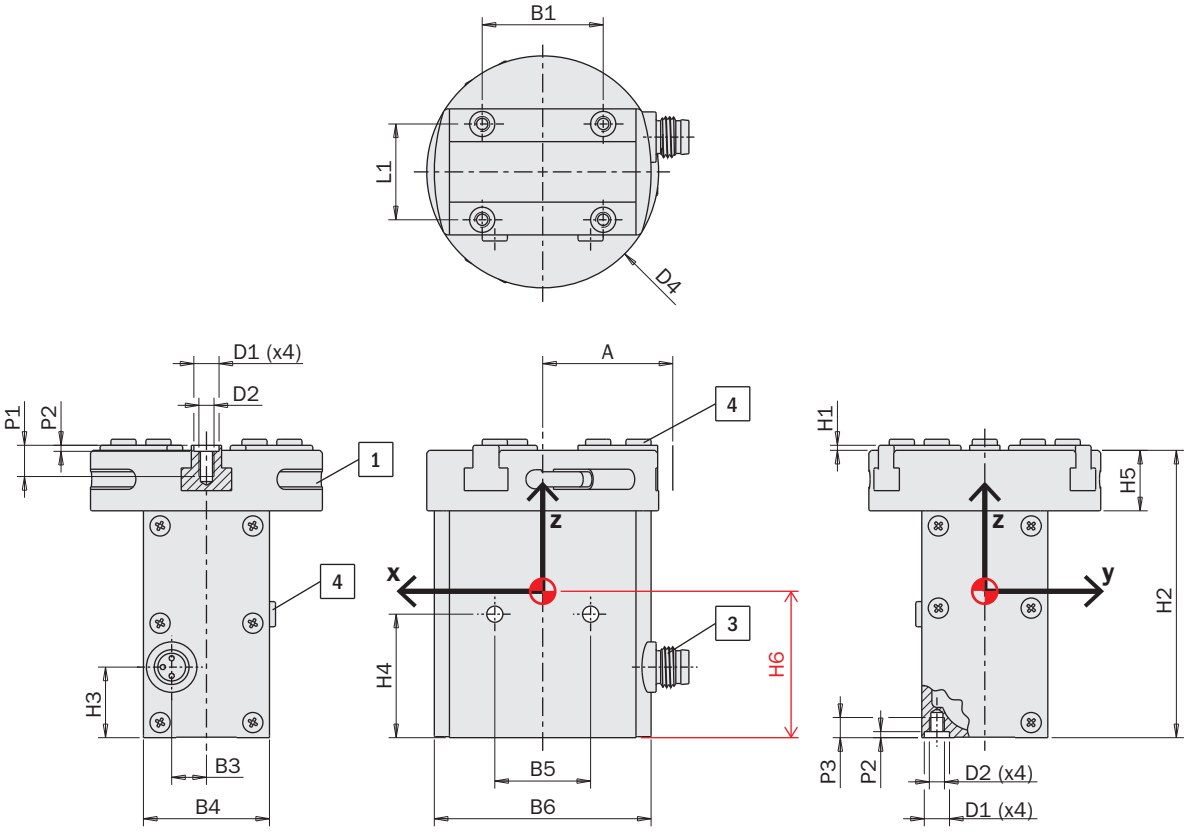

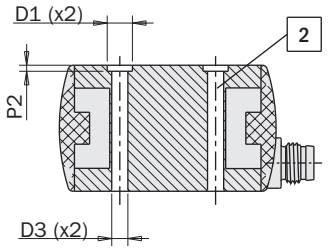

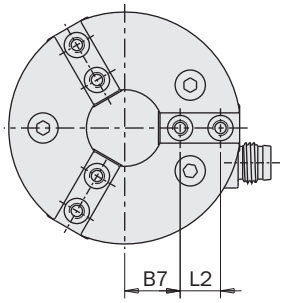

		MPTM1606	MPTM2508	MPTM3210
A		25.8	36	44
B1	±0.02	24	30	36
B2		6	8	9
B3		6.9	10	11
B4		25	32	35
B5	±0.02	19	25	30
B6		45	60	73
B7		11	15	18.5
C		22.8	32	39
D1		Ø5 H8	Ø7 H8	Ø7 H8
D2		M3	M4	M5
D3		Ø3.2	Ø4.2	Ø5.2
D4		Ø46	Ø64	Ø78
H1		1	1	1
H2		57	74.5	85.5
H3		14	17	19
H4	±0.02	24.5	32	38
H5		12	15	17
H6		37	49.3	56.5
L1	±0.02	19	24	26
L2	±0.02	8	12	14
P1		6.2	8	8.5
P2	+0.1	1.2	1.5	1.5
P3		4	6	8

1 磁性传感器插槽
Magnetic sensor slot

2 抓持器紧固通孔
Through hole for gripper fastening

3 电气连接
Connexion électrique

4 对中衬套
Centering sleeves

电气连接

带有 3 极的 M8 标准连接器可以提供 24 伏直流电源以及关闭/打开信号 (ON/OFF)。

不需要其它电子部件驱动抓持器。

Electrical connection

It is possible to provide the power supply at 24Vdc and the and the closing/opening signal (ON/OFF) by the M8 standard connector with 3 poles.

No further electronics is necessary to drive the gripper.

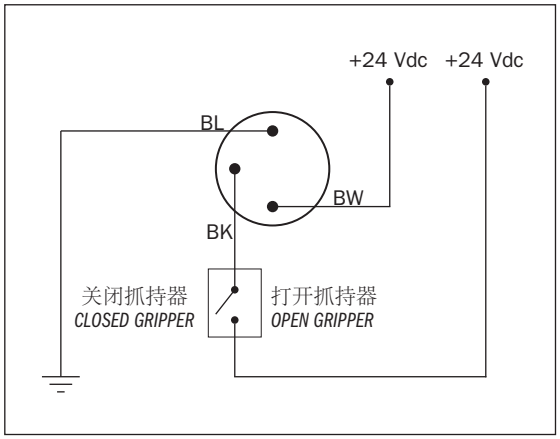

可选 M8x1 标准阴性连接器。
Gimatic 代码： CFGM800325P / CFGM890325P。

Optional M8x1 standard female connector.
Gimatic code: CFGM800325P / CFGM890325P.

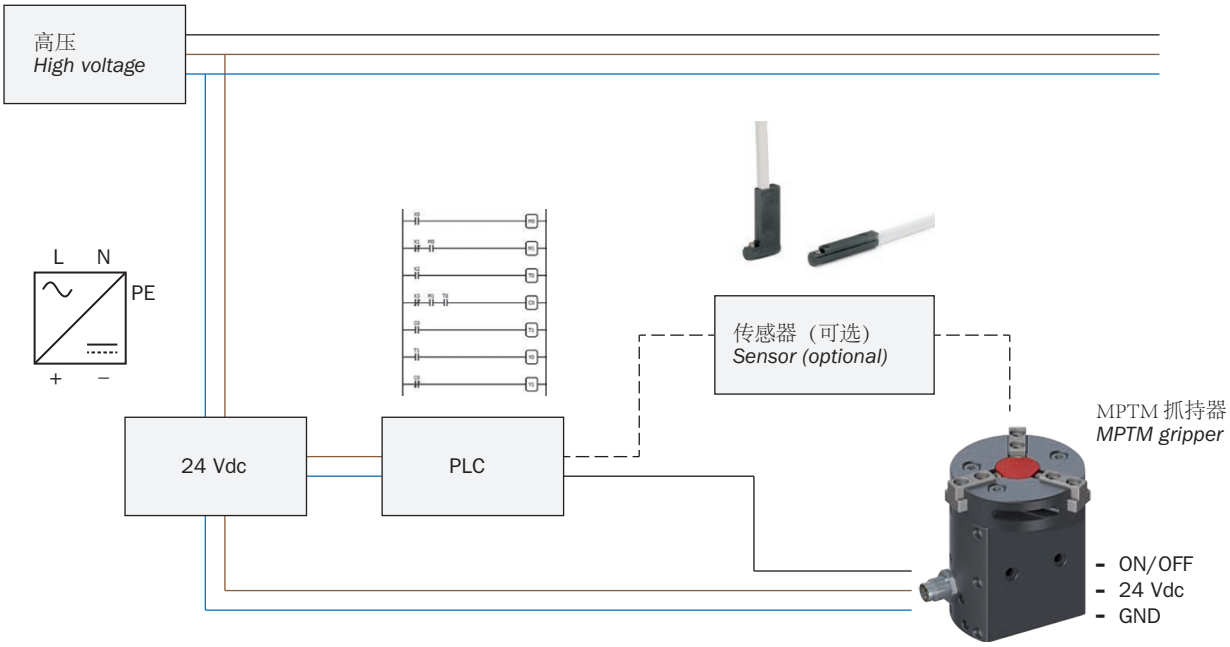

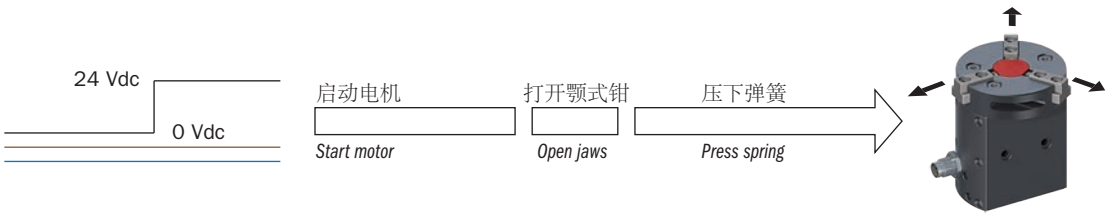

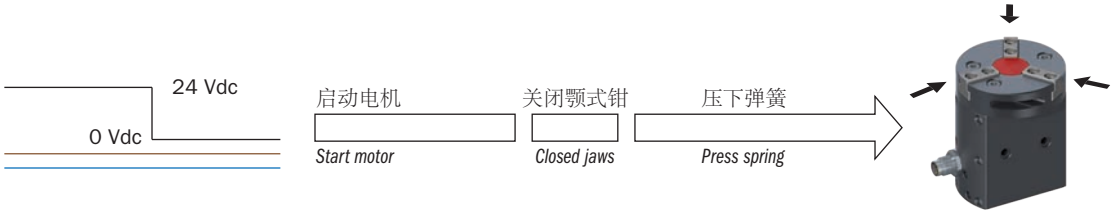

传感器

通过内部颚式钳上的磁体检测位置的一个或多个磁性传感器（可选）可以检查运行位置。
有关详细信息，请参见“附件”部分。

Sensors

The operating position can be checked by one or more magnetic sensors (optional), that detect the position by the magnets on the jaws inside.
For details, see the "Accessories" section.

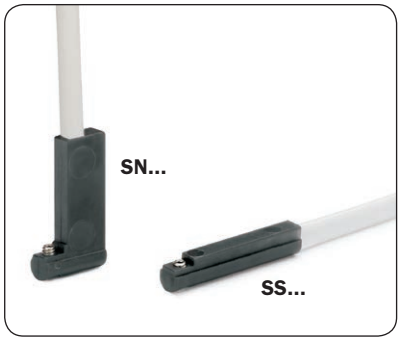

它们均提供了 3 线扁平线缆和一个 LED 灯。

They are all provided with a 3-wire flat cable and a LED.

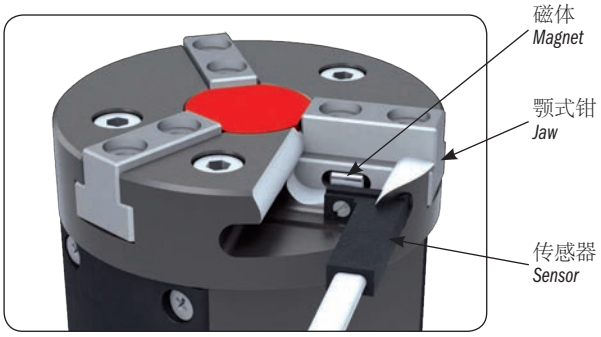

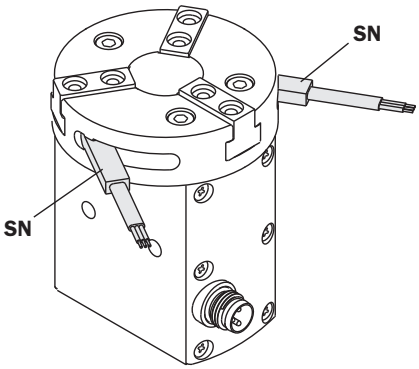

安全负载

检查表中的最大允许负载。
力度或扭矩过大会损坏抓持器，引起运行问题以及危及操作人员的安全。
F s、Mx s、My s、Mz s 为配有静止颚式钳的静态条件下的最大允许负载。
F d、Mx d、My d、Mz d 为配有运行颚式钳的动态条件下的最大允许负载。
下表也显示抓持器在峰值性能运行时每个抓持工具上的最大允许负载 (m)。

Safety loads

Check the table for the maximum permitted loads.
Excessive forces or torques can damage the gripper, cause operation problems and endanger the safety of the operator.
F s, Mx s, My s, Mz s, are the maximum permitted loads under static conditions, that is with motionless jaws.
F d, Mx d, My d, Mz d, are the maximum permitted loads under dynamic conditions, that is with running jaws.
The following table also shows the maximum permitted load (m) on each gripping tool when the gripper operates at peak performance.

	MPTM1606	MPTM2508	MPTM3210
F s	60 N	120 N	200 N
Mx s	3 Nm	8 Nm	20 Nm
My s	3 Nm	8 Nm	20 Nm
Mz s	3 Nm	8 Nm	20 Nm
F d	0.6 N	1.2 N	2 N
Mx d	3 Ncm	8 Ncm	20 Ncm
My d	3 Ncm	8 Ncm	20 Ncm
Mz d	3 Ncm	8 Ncm	20 Ncm
m	60 g	120 g	200 g
Z	45 mm	65 mm	90 mm

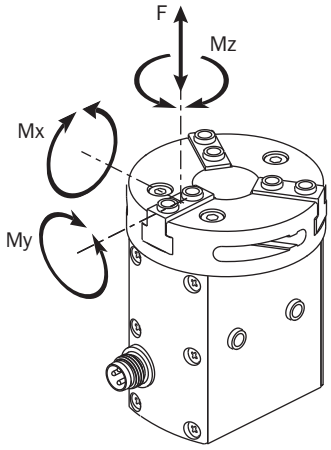

紧固抓持器

抓持器可以紧固到静态或移动部件上。
位于移动部件上时，必须注意承受抓持器及其负载的惯性力。

- 要将抓持器紧固到底座上，使用通过安装板旋入抓持器内的四个螺丝 (SA)。
- 要紧固抓持器侧部，使用通孔 (D3) 内的两个螺丝 (SB)。

在每种情况下，放置包装内提供的两个对中衬套 (BA)。检查表中安装板内其外罩的尺寸（DA 和 PA）。

Gripper fastening

The gripper can be fastened to a static or moving part.
When on a moving part, you must pay attention to the inertial force to which the gripper and its load are subjected.

- *To fasten gripper to base, use four screws (SA) through the mounting plate, screwed in the gripper.*
- *To fasten the gripper side, use two screws (SB) in the through holes (D3).*

In every case, put the two centering sleeves (BA), which are supplied in the package. Check the dimensions (DA and PA) in the table for their housings in the mounting plate.

	MPTM1606	MPTM2508	MPTM3210
B4	25	30	35
D3	Ø3.2	Ø4.2	Ø5.2
DA	Ø5 h7	Ø7 h7	Ø7 h7
P3	4	6	8
PA	1.2	1.5	1.5
SA	M3	M4	M5
SB	M3	M4	M5

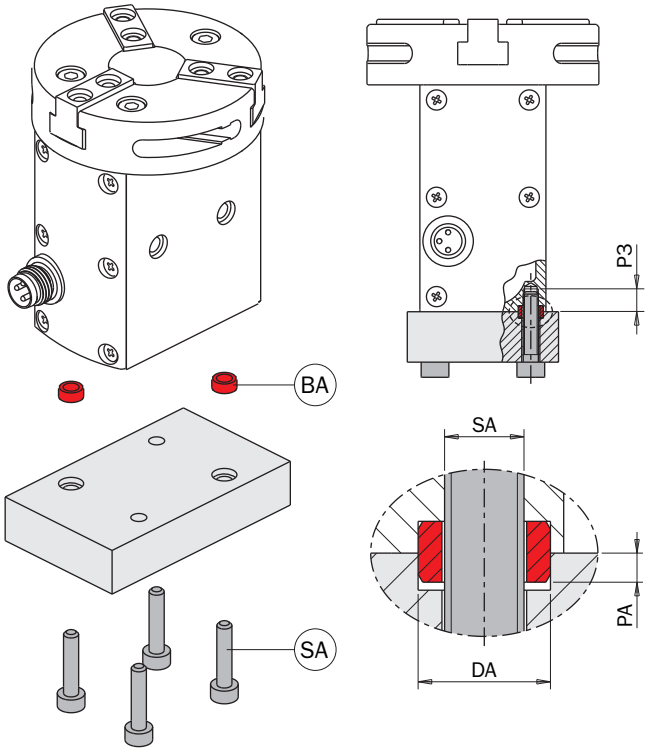

包装内提供用于抓持工具的 6 个对中环 (BA) 和用于外罩的 2 个对中衬套 (BA)。

6 centering rings (BA) for the gripping tools and 2 centering sleeves (BA) for the housing are supplied in the packaging.

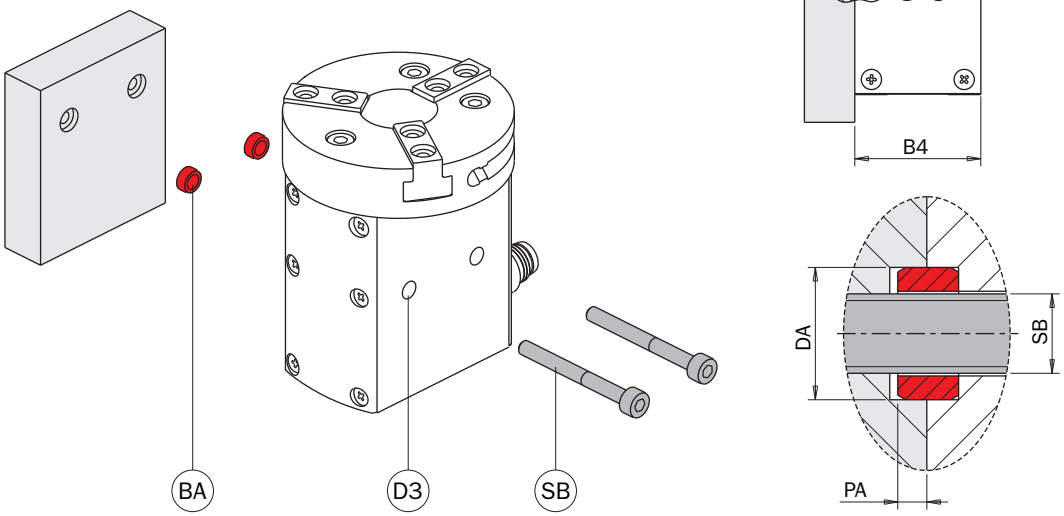

09/2016

紧固抓持工具

抓持工具必须尽可能短而轻。
必须采用颚式钳校准孔 (D1) 内的两个螺丝 (SC) 和两个对中衬套 (BA) 对其进行紧固。

Gripping tool fastening

The gripping tools must be as short and light as possible. They must be fastened by two screws (SC) and two centering sleeves (BA) in the calibrated holes (D1) of the jaws.

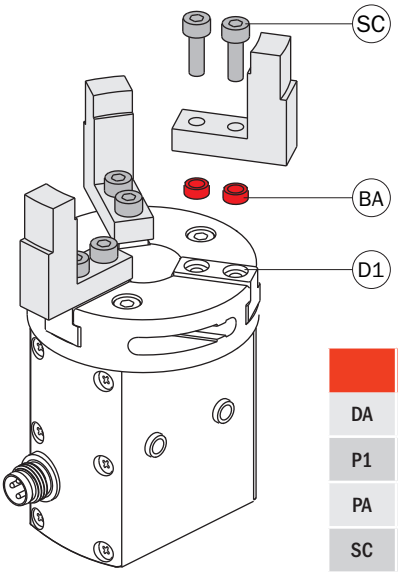

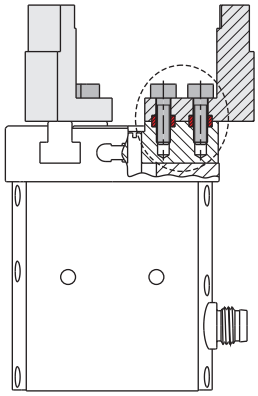

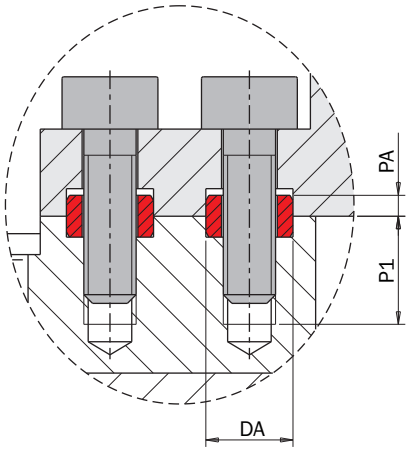

	MPTM1606	MPTM2508	MPTM3210
DA	Ø5 h7	Ø7 h7	Ø7 h7
P1	6.2	8	8.5
PA	1.2	1.5	1.5
SC	M3	M4	M5

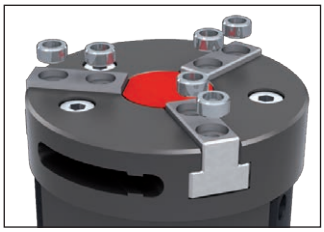

系列兼容性

MPTM 系列抓持器完美兼容 MRE 系列旋转执行器，无需使用任何特殊板。

Serie compatibility

MPTM grippers series is perfectly compatible with MRE rotary series actuators without any special plate.

MPTM

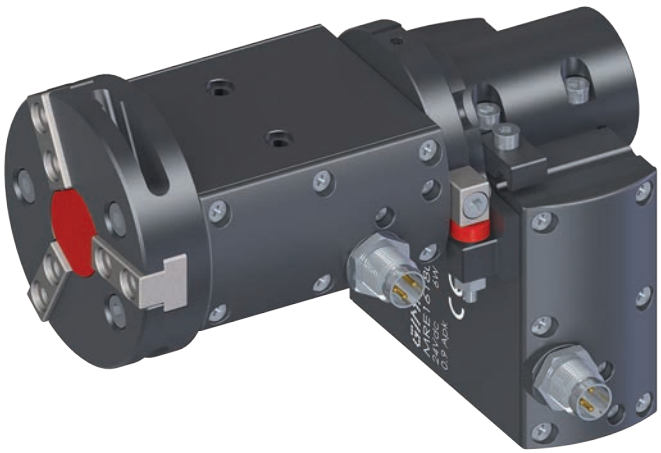

MRE

带有 2 个颚式钳的角形自对中电动抓持器

- 即插即用用户友好型抓持器。
- 抓持器啮合时不耗电。
- 不要求编程。
- 停电时保证保持抓持器。
- 自适应颚式部件。
- 长寿型无电刷电机（无电刷直流电机）。
- 内置式电机驱动器。
- 24 伏直流低压电源。
- M8x1 3 极标准连接。
- PLC 作为气动阀可控。
- 不包括自对中系统。
- 纤维碳齿轮减速。
- 1000 万周期免维护。
- 颚式钳包含在抓持器轮廓内。
- 最佳平衡重量、尺寸和力度。
- 兼容旋转执行器接头。
- 可选磁性传感器。

2-jaw angular self-centering electric gripper

- *Plug & play user friendly gripper.*
- *No electricity consumption when gripper is engaged.*
- *No programming required.*
- *Gripper retention guaranteed in event of blackout.*
- *Self Adapting jaws part.*
- *Long life Brushless motor (Brushless DC).*
- *Built-in motor driver.*
- *24 Vdc Low Voltage Power Supply.*
- *M8x1, 3 poles standard connection.*
- *Controllable by PLC as a pneumatic valve.*
- *Exclusive self-centering system.*
- *Fiber-carbon gear reduction.*
- *10 milion cycle maintenance-free.*
- *Jaws contained within gripper profile.*
- *Weight-dimensions-force best trade off.*
- *Rotary actuator fitting compatible.*
- *Optional magnetic sensors.*

MPBM1640 **MPBM2540** **MPBM3240**

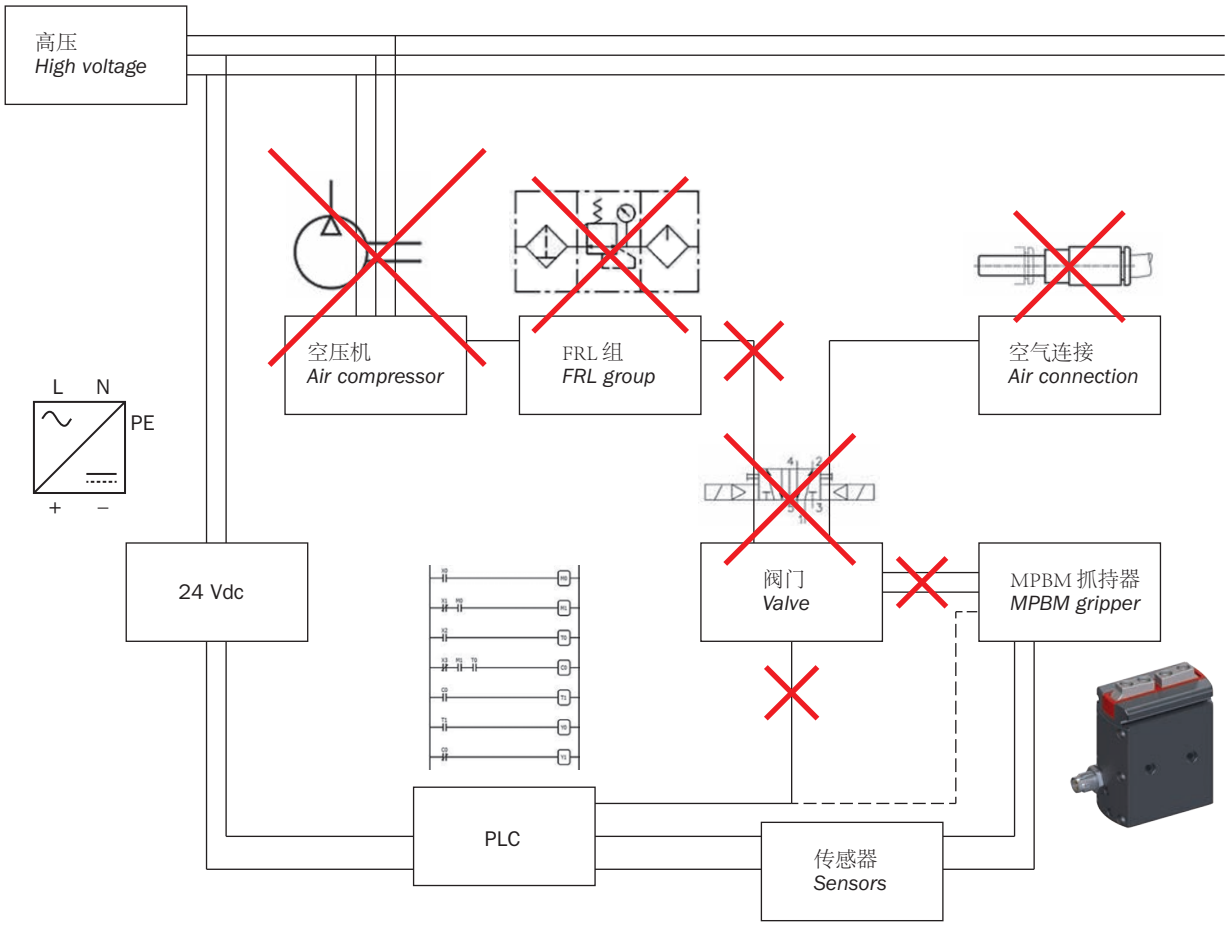



	MPBM1640	MPBM2540	MPBM3240
总抓持扭矩 *Total gripping torque*	68 Ncm	151 Ncm	277 Ncm
行程 （±2°） *Stroke*	2x23°	2x23°	2x23°
30° C 环境温度频率 *Frequency at an ambient temperature of 30°C*	0.93 Hz	0.85 Hz	0.81 Hz
颚式钳关闭时间 *Jaw closing time*	0.09 s	0.13 s	0.14 s
抓持器工作时间 *Working gripper time*	0.18 s	0.31 s	0.25 s
30° C 环境温度负载循环 *Duty cycle at an ambient temperature of 30°C*	34%	53%	41%
电源 *Power supply*	24 Vdc ±10%	24 Vdc ±10%	24 Vdc ±10%
峰值电流 *Peak current*	0.9 Apk	1.2 Apk	3.8 Apk
标称电流 *Nominal current*	0.3 Arms	0.4 Arms	0.8 Arms
无电刷电机功率 *Brushless motor power*	6 W	11 W	23 W
连接 *Connection*	M8 – 3 极 *M8 - 3 poles*	M8 – 3 极 *M8 - 3 poles*	M8 – 3 极 *M8 - 3 poles*
打开/关闭输入信号 *Open/closed input signal*	PNP 开路集电极 *PNP open collector*	PNP 开路集电极 *PNP open collector*	PNP 开路集电极 *PNP open collector*
重复精确度 *Repetition accuracy*	0.02 mm	0.02 mm	0.02 mm
运行温度 *Operating temperature*	5° ÷ 60°C	5° ÷ 60°C	5° ÷ 60°C
环境防护等级 *Environmental Degree*	IP60	IP60	IP60
噪音水平 *Noise level*	< 70 dB	< 70 dB	< 70 dB
质量（包括电机） *Mass (motor included)*	140 g	315 g	510 g
最大惯性负载 *Maximum inertial load*	-	-	-
IPA 洁净室认证 *IPA Clean Room Certification*	-	-	-
参考标准 *Reference standards*	EN 61000-6-2 + EC + IS1; EN 61000-6-3 + A1		
重心转动惯量 Jxx *Barycentric moment of inertia*	0.42 $kgcm^2$	1.72 $kgcm^2$	3.52 $kgcm^2$
重心转动惯量 Jyy *Barycentric moment of inertia*	0.53 $kgcm^2$	2.18 $kgcm^2$	4.8 $kgcm^2$
重心转动惯量 Jzz *Barycentric moment of inertia*	0.23 $kgcm^2$	0.94 $kgcm^2$	2.15 $kgcm^2$

抓持力

本电动抓持器可用于外部或内部抓持应用。
部件将被抓持在颚式钳行程内的任意位置。
抓持部件后，弹簧力将固定部件
（电机关闭和零消耗）。
即使停电。
另外，即使停电，抓持器机构也不可逆转。
因此，请勿尝试手动打开或关闭抓持器。

Gripping force

This electric gripper can be used for either external or internal gripping applications.
The part will be gripped in any position within the jaw stroke.
After the part is gripped, the spring force will hold the part (motor OFF and ZERO consumption).
Even in case of power black-out.
Furthermore the gripper mechanism is irreversible, even without power supply.
So do not attempt to open or close the gripper manually.

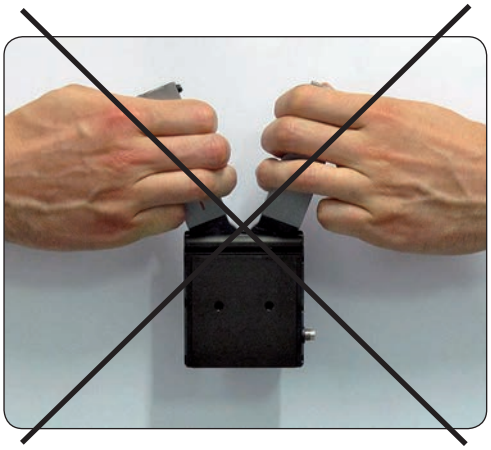

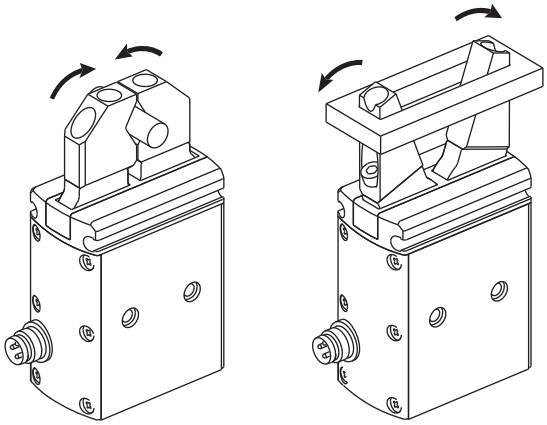

图形以抓持工具长度 Z 为函数显示每个颚式钳的抓持力。

The graphs show the gripping force on each jaw, as a function of the gripping tool length Z.

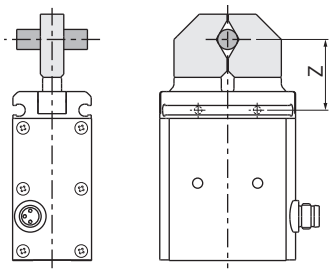

MPBM1640

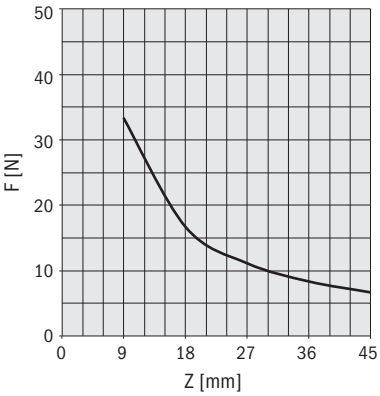

MPBM2540

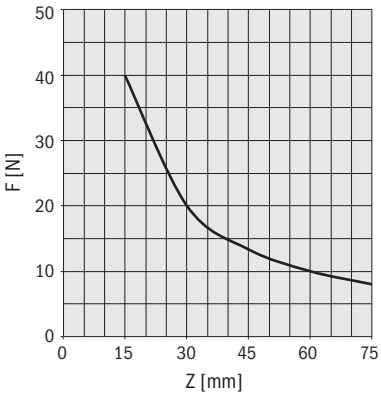

MPBM3240

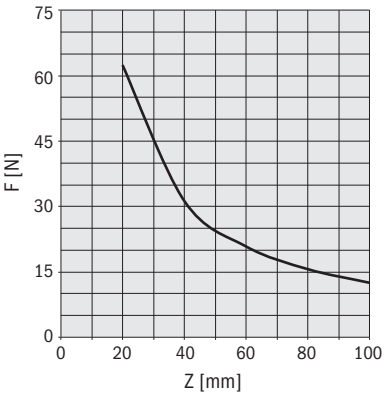

尺寸（毫米）
Dimensions (mm)

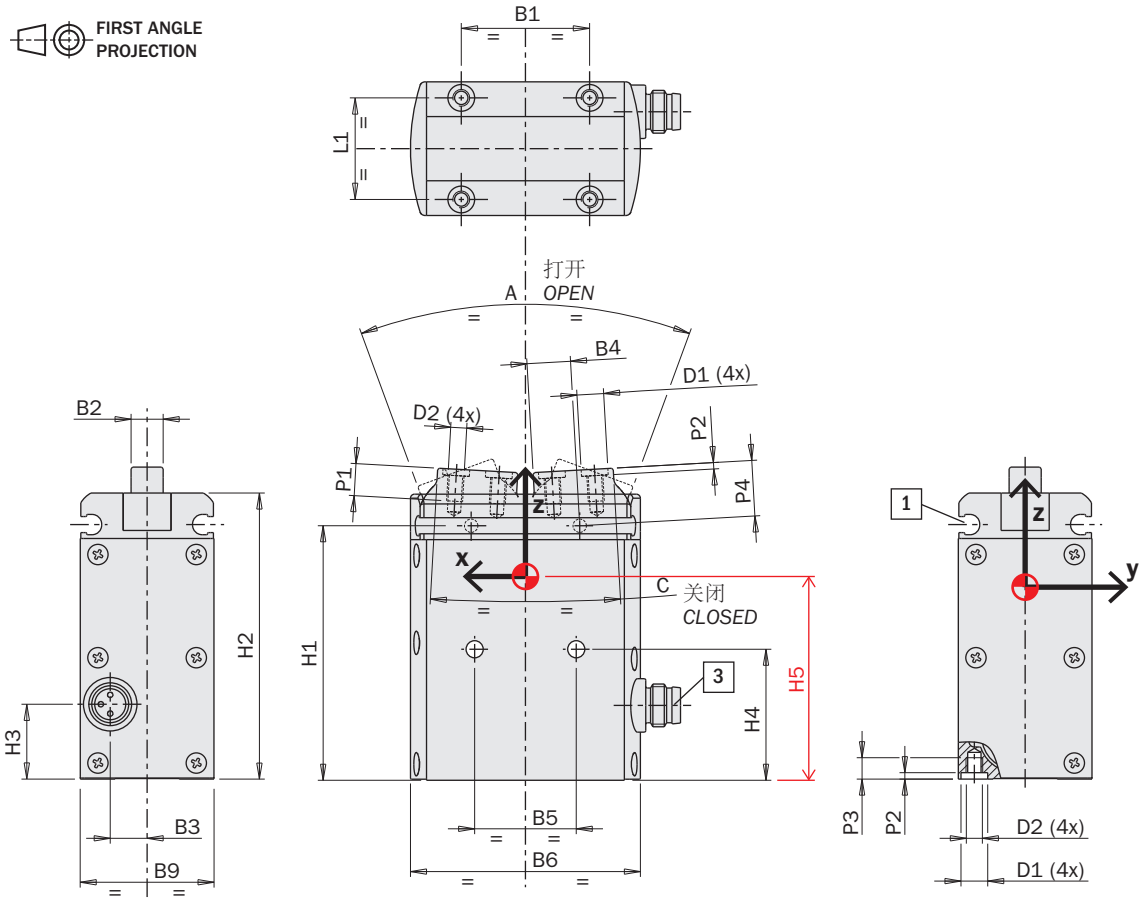

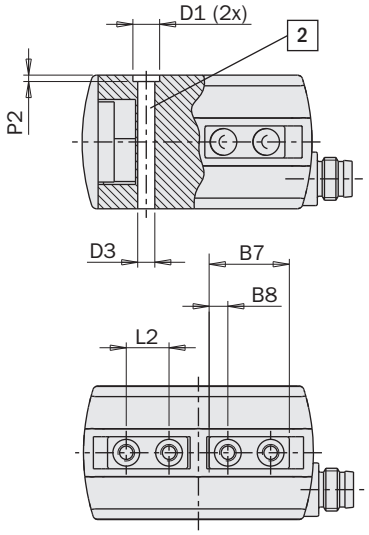

		MPBM1640	MPBM2540	MPBM3240
A		40°	40°	40°
B1	±0.02	24	30	36
B2		6	8	9
B3		6.9	10	11
B4		8.15	7.5	12.25
B5	±0.02	19	25	30
B6		45	60	73
B7		15	20	24
B8		3.5	4.5	5
B9		25	32	35
C		6°	6°	6°
D1		Ø5 H8	Ø7 H8	Ø7 H8
D2		M3	M4	M5
D3		Ø3.2	Ø4.2	Ø5.2
H1		47.6	63	72
H2		53.5	70	80
H3		14	17	19
H4	±0.02	24.5	32	38
H5		32.3	42.5	48.5
L1	±0.02	19	24	26
L2	±0.02	8	11	14
P1		6	8	10
P2	+0.1	1.2	1.5	1.5
P3		4	6	8
P4		10.4	14	16

1 磁性传感器插槽
Magnetic sensor slot

2 抓持器紧固通孔
Through hole for gripper fastening

3 电气连接
Connexion électrique

电气连接

带有 3 极的 M8 标准连接器可以提供 24 伏直流电源以及关闭/打开信号 (ON/OFF)。

不需要其它电子部件驱动抓持器。

Electrical connection

It is possible to provide the power supply at 24Vdc and the and the closing/opening signal (ON/OFF) by the M8 standard connector with 3 poles.

No further electronics is necessary to drive the gripper.

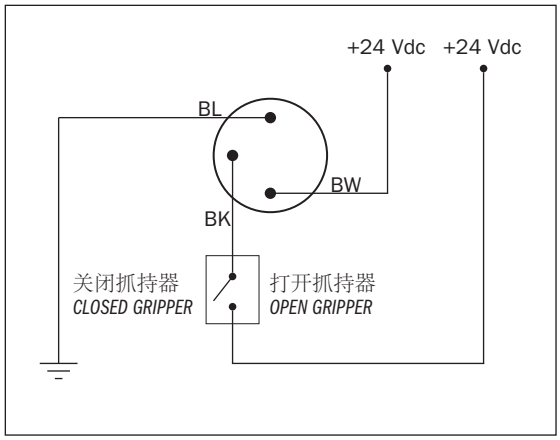

可选 M8x1 标准阴性连接器。
Gimatic 代码： CFGM800325P / CFGM890325P。

Optional M8x1 standard female connector.
Gimatic code: CFGM800325P / CFGM890325P.

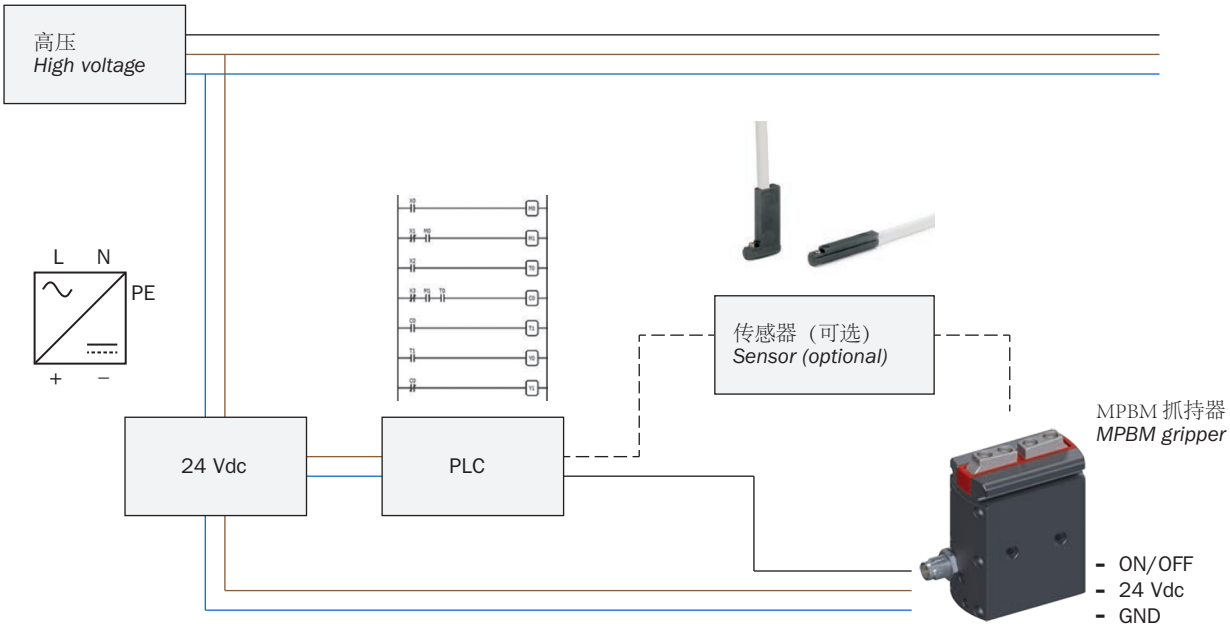

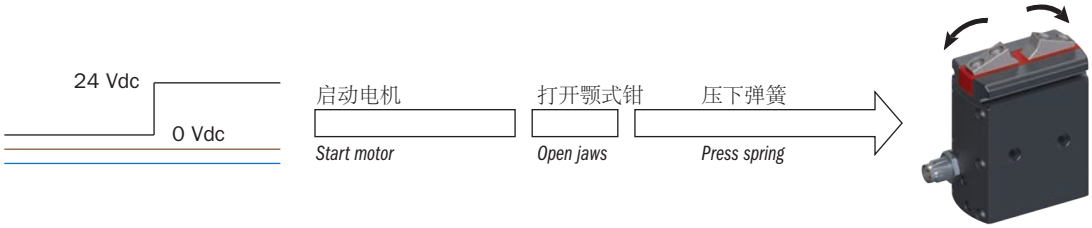

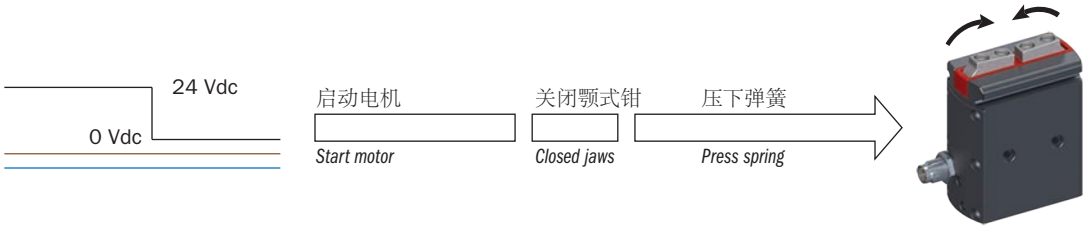

传感器

通过内部颚式钳上的磁体检测位置的一个或多个磁性传感器（可选）可以检查运行位置。
有关详细信息，请参见“附件”部分。

Sensors

The operating position can be checked by one or more magnetic sensors (optional), that detect the position by the magnets on the jaws inside.
For details, see the "Accessories" section.

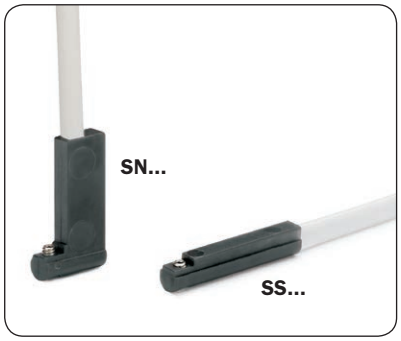

它们均提供了 3 线扁平线缆和一个 LED 灯。

They are all provided with a 3-wire flat cable and a LED.

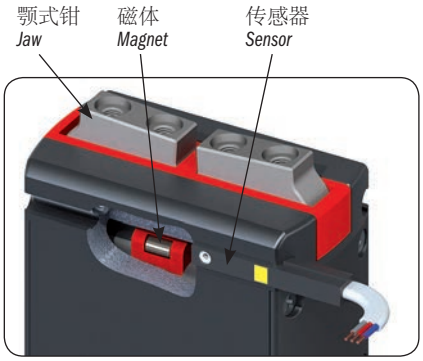

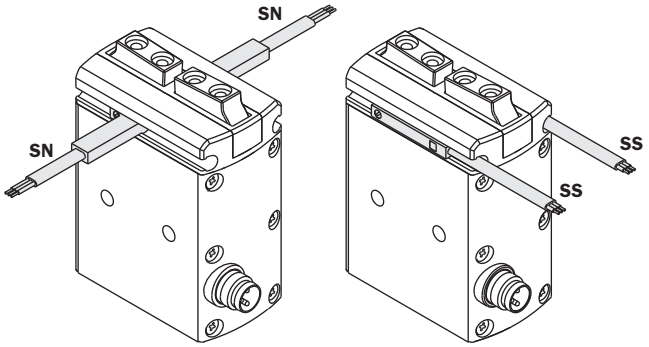

安全负载

检查表中的最大允许负载。
力度或扭矩过大会损坏抓持器，引起运行问题以及危及操作人员的安全。
F s、Mx s、My s、Mz s 为配有静止颚式钳的静态条件下的最大允许负载。
J 是每个抓持工具上的最大允许转动惯量。

Safety loads

Check the table for the maximum permitted loads.
Excessive forces or torques can damage the gripper, cause operation problems and endanger the safety of the operator.
F s, Mx s, My s, Mz s, are the maximum permitted loads under static conditions, that is with motionless jaws.
J is the maximum permitted moment of inertia on each gripping tool.

	MPBM1640	MPBM2540	MPBM3240
F s	40 N	80 N	120 N
Mx s	0.5 Nm	1 Nm	2.5 Nm
My s	1 Nm	2 Nm	5 Nm
Mz s	1 Nm	2 Nm	5 Nm
J	0.4 kgcm2	2 kgcm2	5 kgcm²

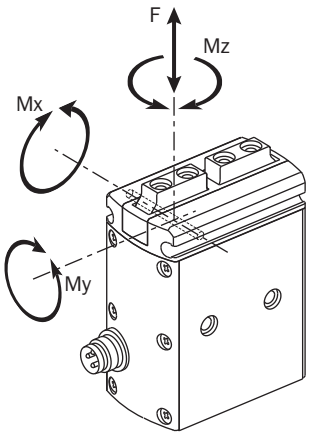

紧固抓持器

抓持器可以紧固到静态或移动部件上。
位于移动部件上时，必须注意承受抓持器及其负载的惯性力。

- 要将抓持器紧固到底座上，使用通过安装板旋入抓持器内的四个螺丝 (SA)。
- 要紧固抓持器侧部，使用通孔 (D3) 内的两个螺丝 (SB)。

在每种情况下，放置包装内提供的两个对中衬套 (BA)。检查表中安装板内其外罩的尺寸（DA 和 PA）。

Gripper fastening

The gripper can be fastened to a static or moving part.
When on a moving part, you must pay attention to the inertial force to which the gripper and its load are subjected.

- *To fasten gripper to base, use four screws (SA) through the mounting plate, screwed in the gripper.*
- *To fasten the gripper side, use two screws (SB) in the through holes (D3).*

In every case, put the two centering sleeves (BA), which are supplied in the package. Check the dimensions (DA and PA) in the table for their housings in the mounting plate.

	MPBM1640	MPBM2540	MPBM3240
B9	25	32	35
D3	Ø3.2	Ø4.2	Ø5.2
DA	Ø5 h7	Ø7 h7	Ø7 h7
P3	4	6	8
PA	1.2	1.5	1.5
SA	M3	M4	M5
SB	M3	M4	M5

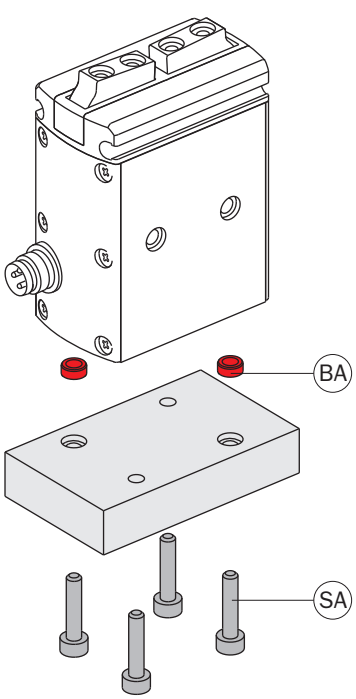

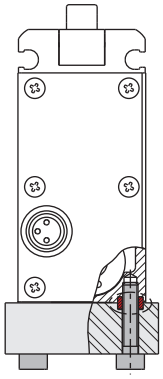

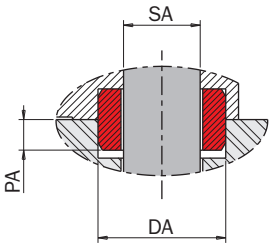

包装内提供用于抓持工具的 4 个对中环 (BA) 和用于外罩的 2 个对中衬套 (BA)。

4 centering rings (BA) for the gripping tools and 2 centering sleeves (BA) for the housing are supplied in the packaging.

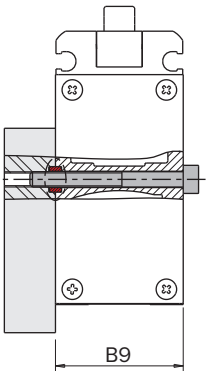

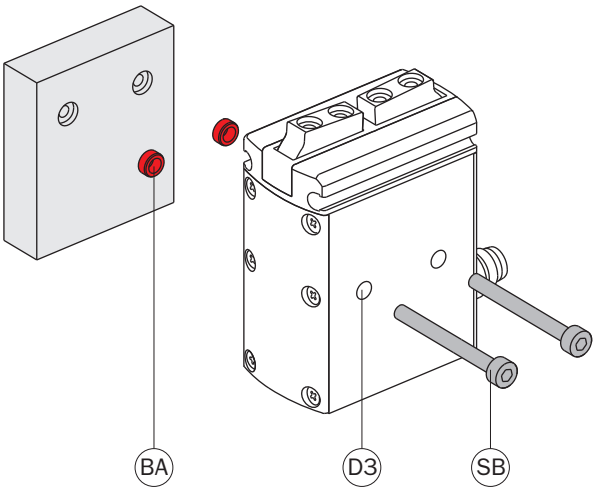

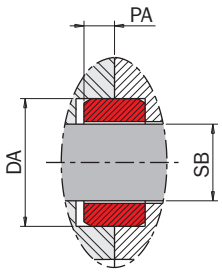

09/2016

紧固抓持工具

抓持工具必须尽可能短而轻。
必须采用颚式钳校准孔 (D1) 内的两个螺丝 (SC) 和两个对中衬套 (BA) 对其进行紧固。

Gripping tool fastening

The gripping tools must be as short and light as possible. They must be fastened by two screws (SC) and two centering sleeves (BA) in the calibrated holes (D1) of the jaws.

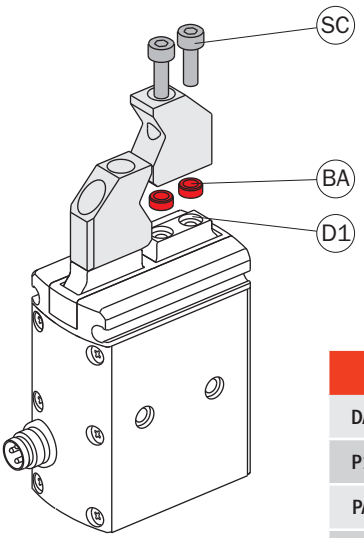

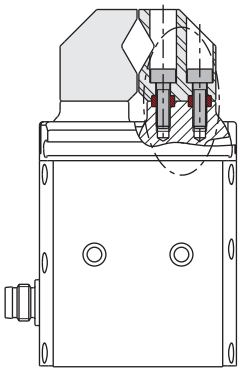

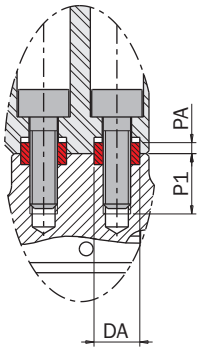

	MPBM1640	MPBM2540	MPBM3240
DA	Ø5 h7	Ø7 h7	Ø7 h7
P1	6	8	10
PA	1.2	1.5	1.5
SC	M3	M4	M5

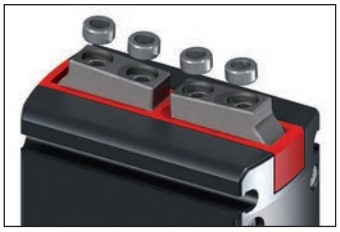

系列兼容性

MPBM 系列抓持器完美兼容 MRE 系列旋转执行器，无需使用任何特殊板。

Serie compatibility

MPBM grippers series is perfectly compatible with MRE rotary series actuators without any special plate.

MPBM **MRE**

带有 2 个颚式钳的角形自对中电动道口抓持器

- 即插即用用户友好型抓持器。
- 抓持器啮合时不耗电。
- 不要求编程。
- 停电时保证保持抓持器。
- 自适应颚式部件。
- 长寿型无电刷电机（无电刷直流电机）。
- 内置式电机驱动器。
- 24 伏直流低压电源。
- M8x1 3 极标准连接。
- PLC 作为气动阀可控。
- 不包括自对中系统。
- 纤维碳齿轮减速。
- 1000 万周期免维护。
- 颚式钳包含在抓持器轮廓内。
- 最佳平衡重量、尺寸和力度。
- 兼容旋转执行器接头。
- 可选磁性传感器。
- 颚氏钳上带有磁块抓持传感器的 S 版本。

2-jaw angular self-centering electric sprue gripper

- *Plug & play user friendly gripper.*
- *No electricity consumption when gripper is engaged.*
- *No programming required.*
- *Gripper retention guaranteed in event of blackout.*
- *Self Adapting jaws part.*
- *Long life Brushless motor (Brushless DC).*
- *Built-in motor driver.*
- *24 Vdc Low Voltage Power Supply.*
- *M8x1, 3 poles standard connection.*
- *Controllable by PLC as a pneumatic valve.*
- *Exclusive self-centering system.*
- *Fiber-carbon gear reduction.*
- *10 milion cycle maintenance-free.*
- *Jaws contained within gripper profile.*
- *Weight-dimensions-force best trade off.*
- *Rotary actuator fitting compatible.*
- *Optional magnetic sensors.*
- *S version with magnetic piece gripping sensor on the jaw.*

(1)
包括传感器 S3N203-G。
The sensor SS3N203-G is included.

MPBS1630

SS3N203-G (1)

MPBS1630S

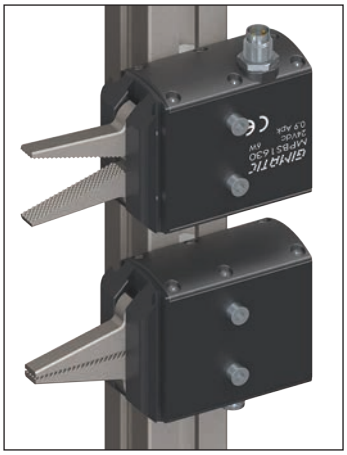

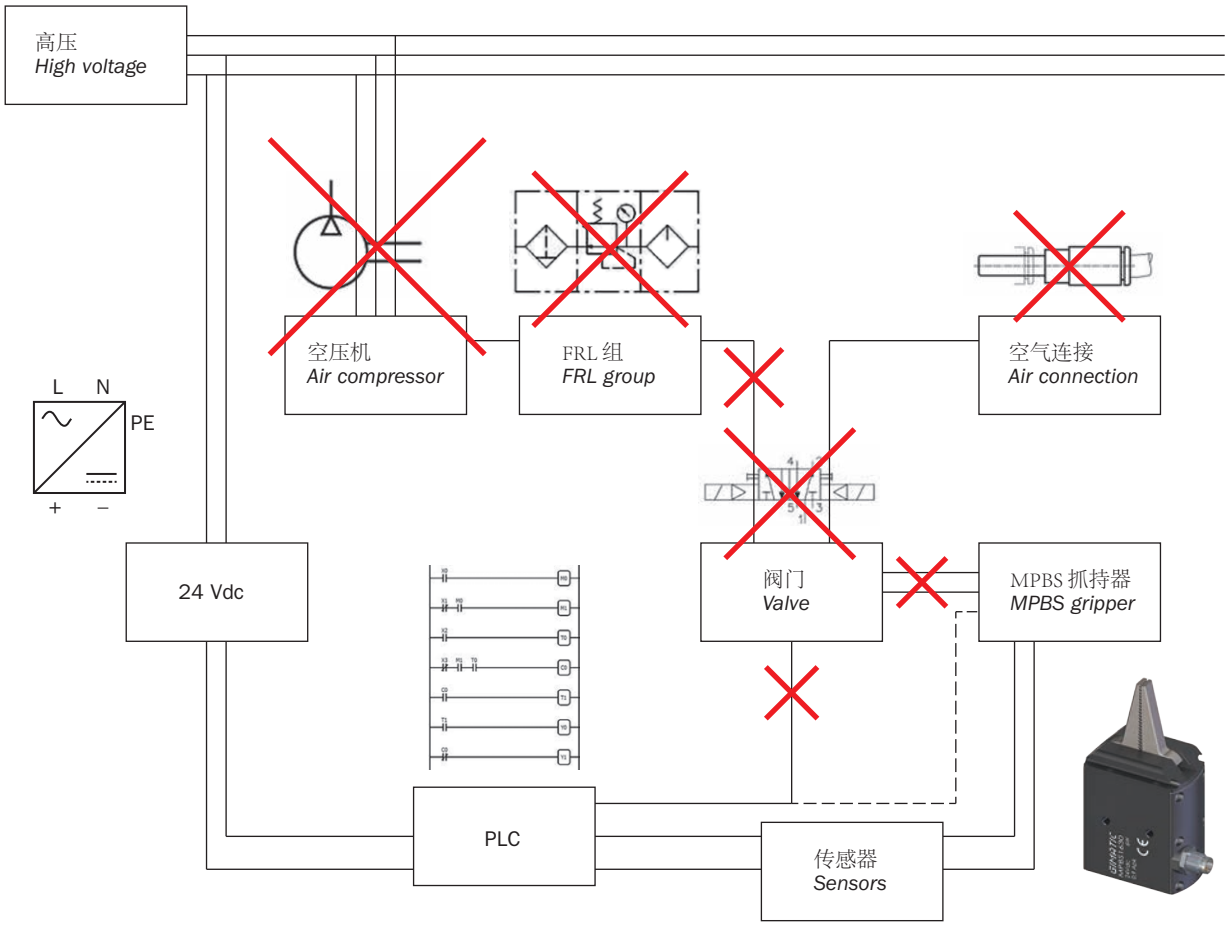

	MPBS1630	MPBS1630S
总抓持扭矩 *Total gripping torque*	70 Ncm	
行程 （±2°） *Stroke*	2x16°	
30° C 环境温度频率 *Frequency at an ambient temperature of 30°C*	1.2 Hz	
颚式钳关闭时间 *Jaw closing time*	0.06 s	
抓持器工作时间 *Working gripper time*	0.18 s	
30° C 环境温度负载循环 *Duty cycle at an ambient temperature of 30°C*	41%	
电源 *Power supply*	24 Vdc ±10%	
峰值电流 *Peak current*	0.9 Apk	
标称电流 *Nominal current*	0.3 Arms	
无电刷电机功率 *Brushless motor power*	6 W	
连接 *Connection*	M8 - 3极 *M8 - 3 poles*	
打开/关闭输入信号 *Open/closed input signal*	PNP 开路集电极 *PNP open collector*	
重复精确度 *Repetition accuracy*	0.04°	
运行温度 *Operating temperature*	5° ÷ 60°C	
环境防护等级 *Environmental Degree*	IP54	
噪音水平 *Noise level*	< 70 dB	
质量（包括电机） *Mass (motor included)*	145 g	150 g
最大惯性负载 *Maximum inertial load*	-	
IPA 洁净室认证 *IPA Clean Room Certification*	-	
参考标准 *Reference standards*	EN 61000-6-2 + EC + IS1; EN 61000-6-3 + A1	
重心转动惯量 Jxx *Barycentric moment of inertia*	0.53 $kgcm^2$	0.75 $kgcm^2$
重心转动惯量 Jyy *Barycentric moment of inertia*	0.63 $kgcm^2$	0.86 $kgcm^2$
重心转动惯量 Jzz *Barycentric moment of inertia*	0.2 $kgcm^2$	0.22 $kgcm^2$

抓持力

部件将被抓持在颚式钳行程内的任意位置。
抓持部件后，即使停电，弹簧力也将其固定在位（电机关闭、零消耗）。
另外，由于抓持器机构不可逆转，即使停电，也请勿尝试手动打开或关闭抓持器。

Gripping force

The piece will be gripped in any position within the jaw stroke. After the piece is gripped, the spring force will hold it in position (motor OFF and ZERO consumption) even in the case of power black-out.
Furthermore, as the gripper mechanism is irreversible, even without power supply, do not attempt to open or close the gripper manually.

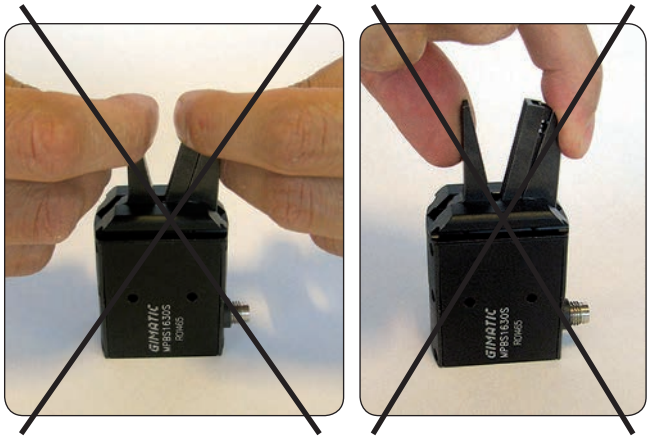

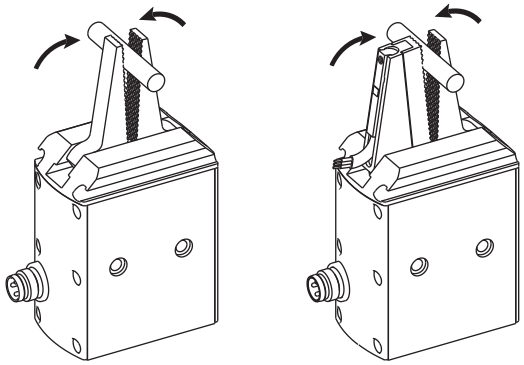

图形以抓持工具长度 Z 为函数显示每个颚式钳的抓持力。

The graphic show the gripping force on each jaw, as a function of the gripping tool length Z.

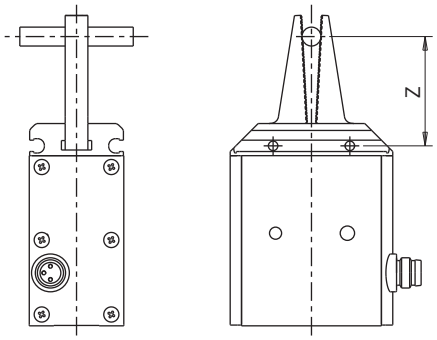

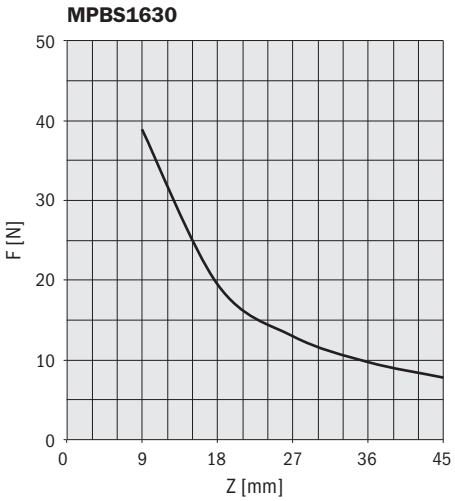

尺寸（毫米）
Dimensions (mm)

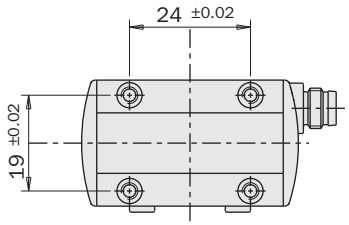

1 磁性传感器插槽
Magnetic sensor slot

2 抓持器紧固通孔
Through hole for gripper fastening

3 电气连接
Connexion électrique

4 对中衬套
Centering sleeves

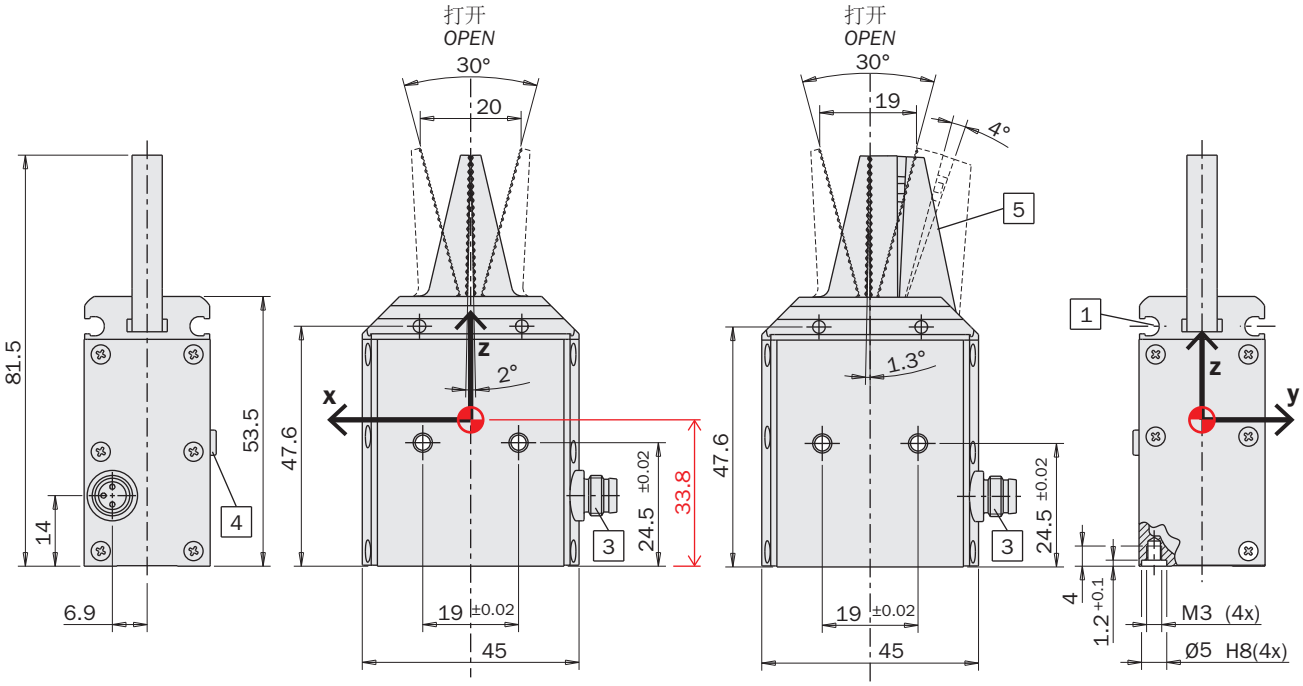

MPBS1630

MPBS1630S

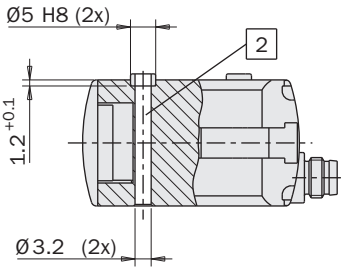

5

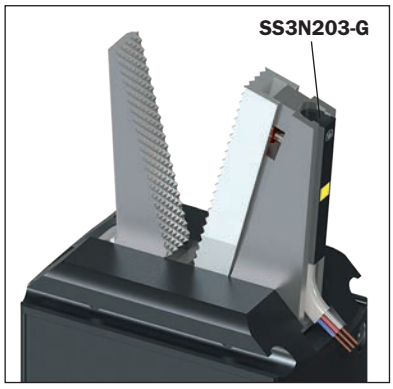

FIRST ANGLE PROJECTION

电气连接

带有 3 极的 M8 标准连接器可以提供 24 伏直流电源以及关闭/打开信号 (ON/OFF)。

不需要其它电子部件驱动抓持器。

Electrical connection

It is possible to provide the power supply at 24Vdc and the and the closing/opening signal (ON/OFF) by the M8 standard connector with 3 poles.

No further electronics is necessary to drive the gripper.

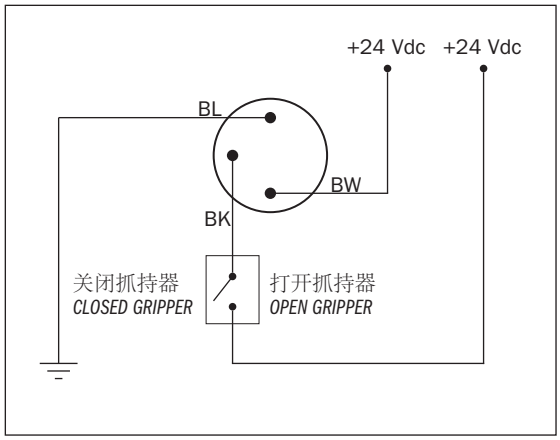

可选 M8x1 标准阴性连接器。
Gimatic 代码： CFGM800325P / CFGM890325P。

Optional M8x1 standard female connector.
Gimatic code: CFGM800325P / CFGM890325P.

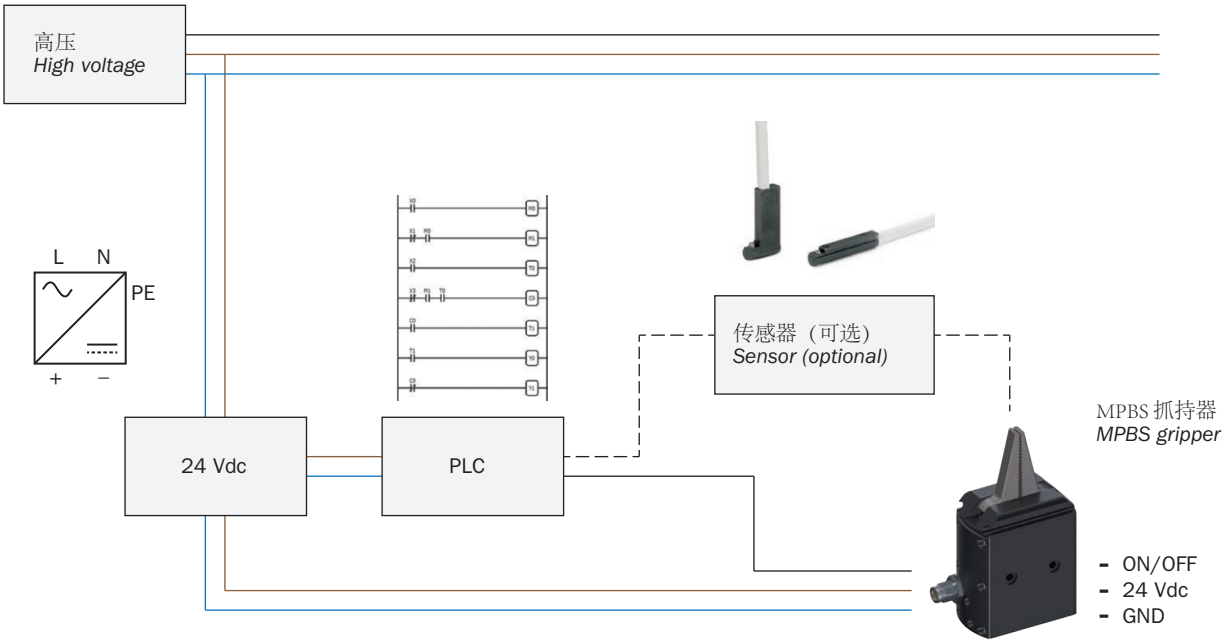

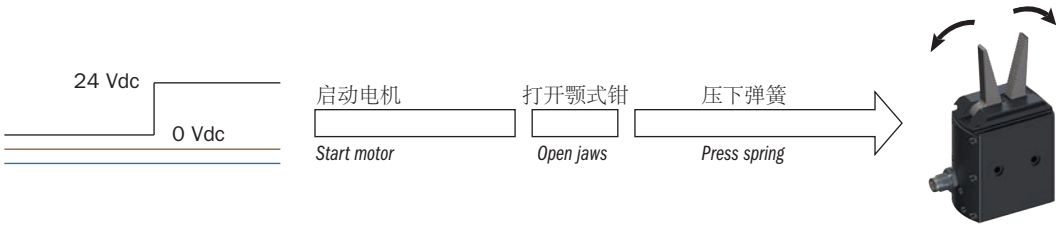

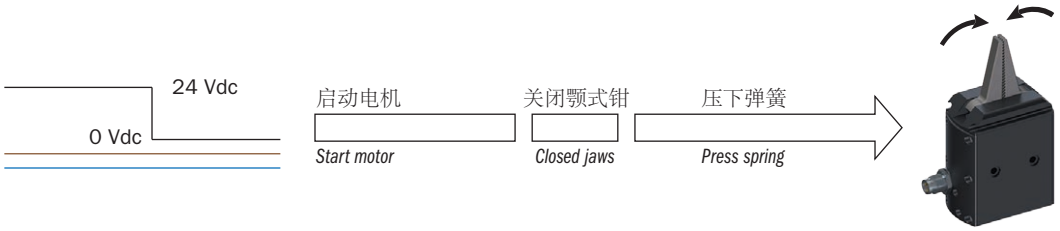

传感器

通过内部颚式钳 (1) 上的磁体检测位置的一个或多个磁性传感器（可选）可以检查运行位置。
S 版本在颚式钳上配有一个磁性传感器，以实现额外道口抓持可靠性 (2)。
有关详细信息，请参见“附件”部分。

Sensors

The operating position can be checked by one or more magnetic sensors (optional), that detect the position by the magnets on the jaws inside (1).
The S version is equipped with a magnetic sensor on the jaw, for extra sprue gripping reliability (2).
For details, see the "Accessories" section.

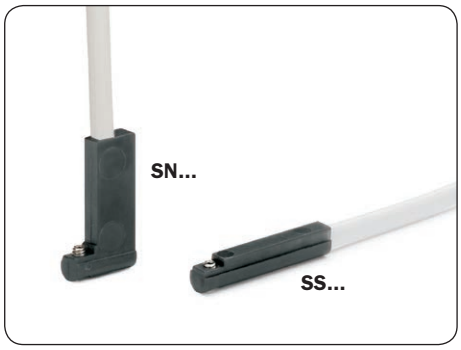

它们均提供了 3 线扁平线缆和一个 LED 灯。

They are all provided with a 3-wire flat cable and a LED.

MPBS1630
MPBS1630S

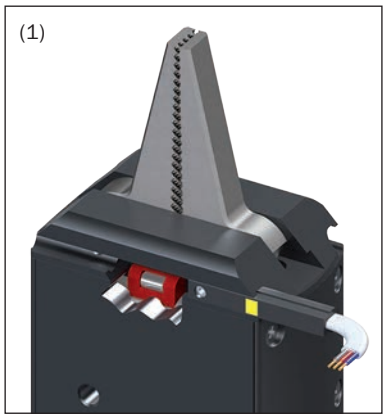

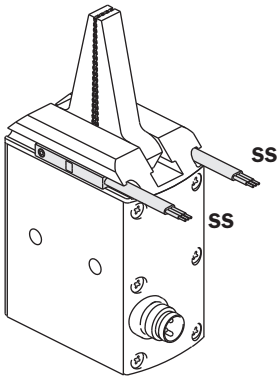

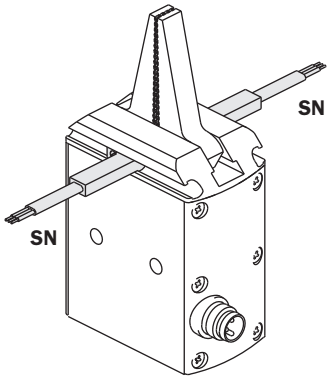

MPBS1630S

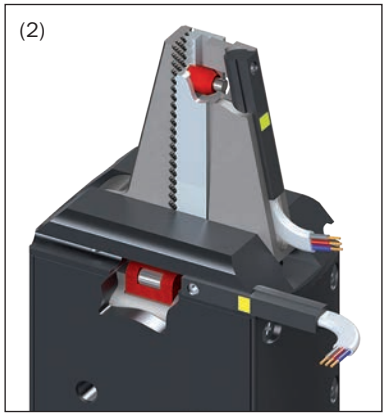

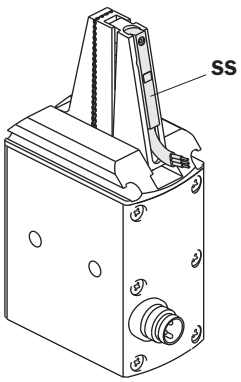

紧固抓持器

抓持器可以紧固到静态或移动部件上。
位于移动部件上时，必须注意承受抓持器及其负载的惯性力。

- 要将抓持器紧固到底座上，使用通过安装板旋入抓持器内的四个螺丝 (SA)。
- 要紧固抓持器侧部，使用通孔 (D3) 内的两个螺丝 (SB)。

在每种情况下，放置包装内提供的两个对中衬套 (BA)。检查表中安装板内其外罩的尺寸（DA 和 PA）。

Gripper fastening

The gripper can be fastened to a static or moving part.
When on a moving part, you must pay attention to the inertial force to which the gripper and its load are subjected.

- *To fasten gripper to base, use four screws (SA) through the mounting plate, screwed in the gripper.*
- *To fasten the gripper side, use two screws (SB) in the through holes (D3).*

In every case, put the two centering sleeves (BA), which are supplied in the package. Check the dimensions (DA and PA) in the table for their housings in the mounting plate.

	MPBS1630 MPBS1630S
D3	Ø3.2
DA	Ø5 h7
P3	4
PA	1.2
SA	M3
SB	M3

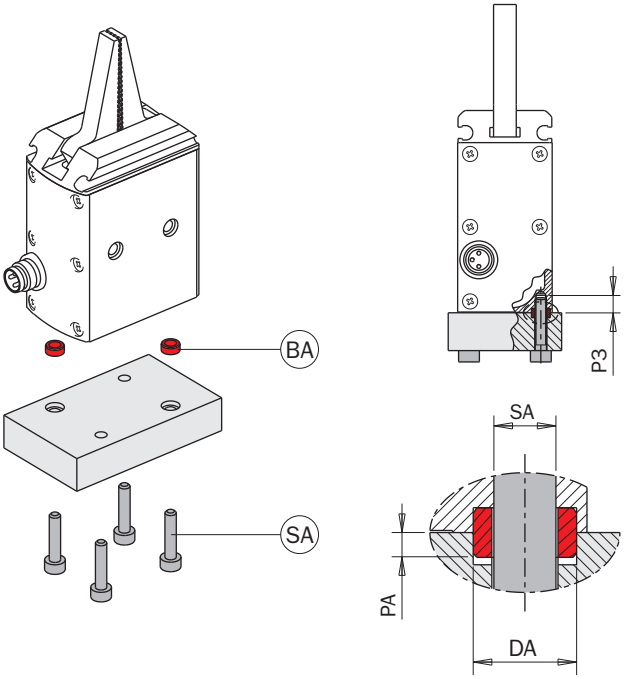

包装内提供用于外罩的 2 个对中衬套 (BA)。

2 centering sleeves (BA) for the housing are supplied in the packaging.

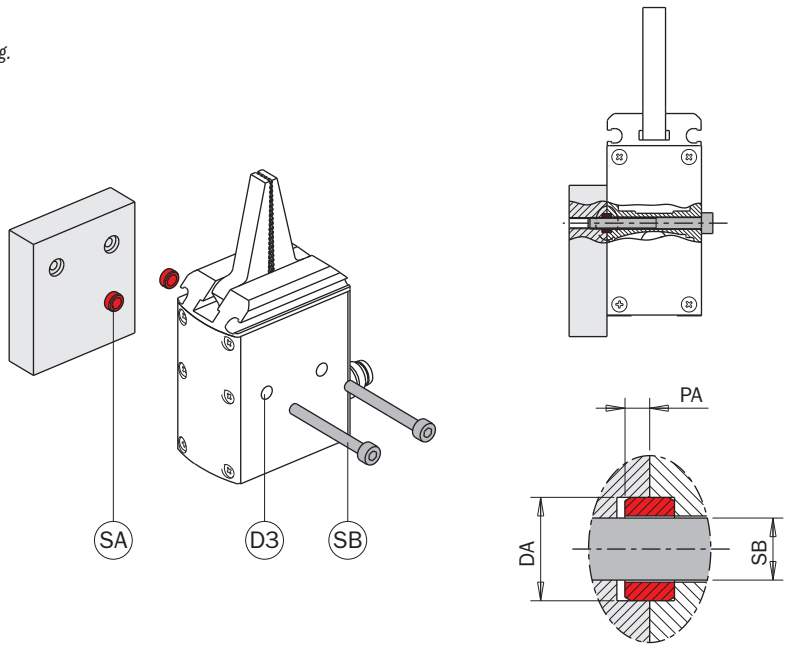

系列兼容性

MPBM 系列抓持器完美兼容 MRE 系列旋转执行器，无需使用任何特殊板。

Serie compatibility

MPBS grippers series is perfectly compatible with MRE rotary series actuators without any special plate.

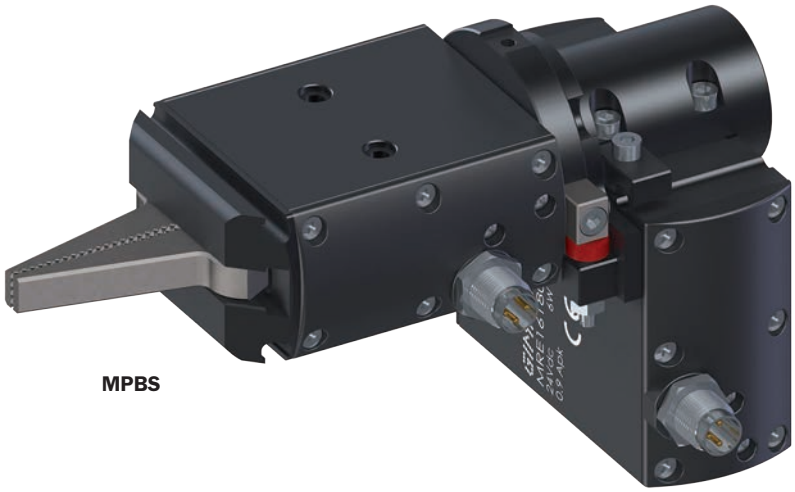

MPBS **MRE**

注意

请勿让抓持器接触腐蚀性物质、焊接飞溅物或研磨性粉末，因为会损坏抓持器。
请勿让人员或物体停留在抓持器运行范围内。
如果将其安装在上面的机器不符合您所在国家的安全法律和标准，请勿运行抓持器。

Cautions

Never let the gripper come into contact with corrosive substances, soldering splashes or abrasive powders as they may damage the gripper.
Never let personnel or objects stand within the operating range of the gripper.
Never operate the gripper if the machine on which it is fitted does not comply with safety laws and standards of your country.

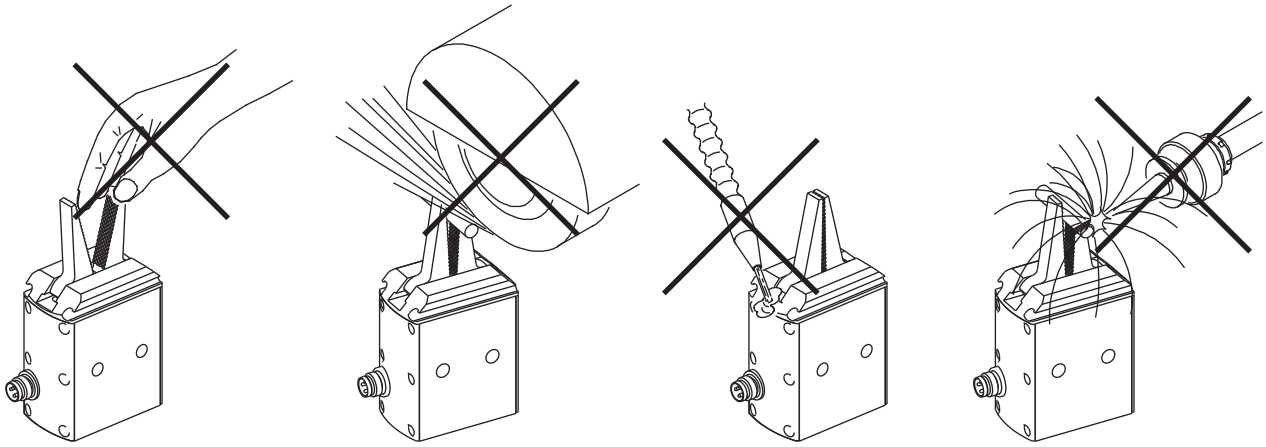

带有 2 个颚式钳的径向自对中电动抓持器

- 即插即用用户友好型抓持器。
- 抓持器啮合时不耗电。
- 不要求编程。
- 停电时保证保持抓持器。
- 自适应颚式部件。
- 长寿型无电刷电机（无电刷直流电机）。
- 内置式电机驱动器。
- 24 伏直流低压电源。
- M8x1 3 极标准连接。
- PLC 作为气动阀可控。
- 不包括自对中系统。
- 纤维碳齿轮减速。
- 1000 万周期免维护。
- 多尘环境防护优良。
- 最佳平衡重量、尺寸和力度。
- 兼容旋转执行器接头。
- 可选电感式传感器。

2-jaw radial self-centering electric gripper

- *Plug & play user friendly gripper.*
- *No electricity consumption when gripper is engaged.*
- *No programming required.*
- *Gripper retention guaranteed in event of blackout.*
- *Self Adapting jaws part.*
- *Long life Brushless motor (Brushless DC).*
- *Built-in motor driver.*
- *24 Vdc Low Voltage Power Supply.*
- *M8x1, 3 poles standard connection.*
- *Controllable by PLC as a pneumatic valve.*
- *Exclusive self-centering system.*
- *Fiber-carbon gear reduction.*
- *10 milion cycle maintenance-free.*
- *Well protected against dusty environments.*
- *Weight-dimensions-force best trade off.*
- *Rotary actuator fitting compatible.*
- *Optional inductive sensors.*

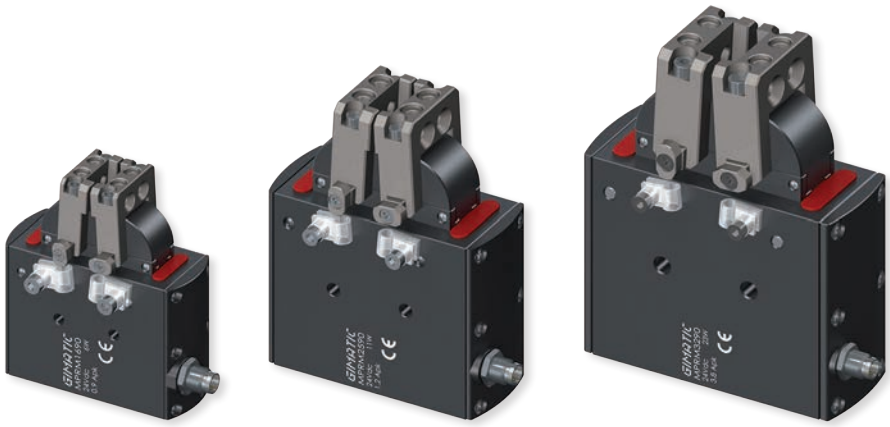

MPRM1690 **MPRM2590** **MPRM3290**

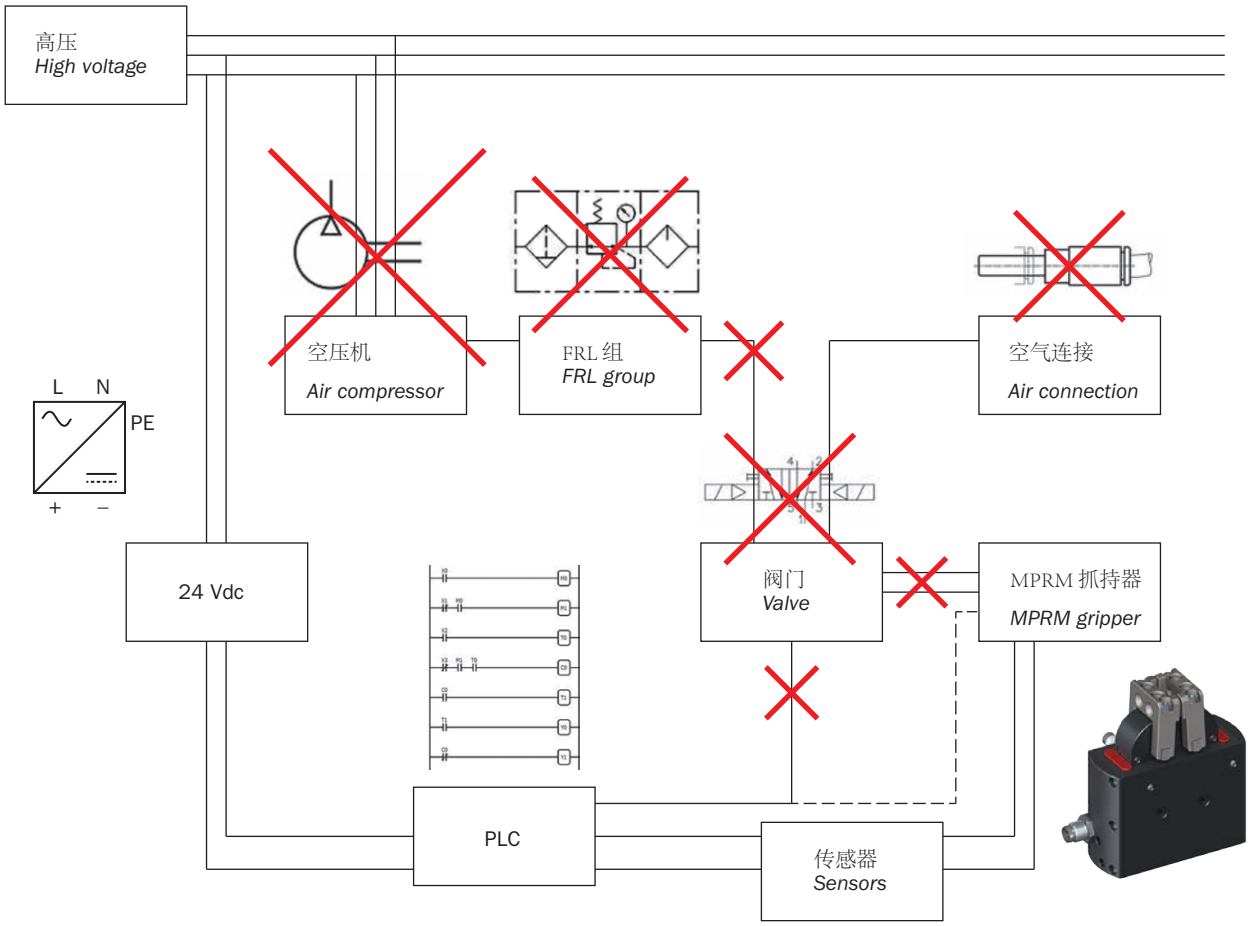

	MPRM1690	MPRM2590	MPRM3290
总抓持扭矩 *Total gripping torque*	52 Ncm	90 Ncm	256 Ncm
行程 (±2°) *Stroke*	2x93°	2x93°	2x93°
30°C 环境温度频率 *Frequency at an ambient temperature of 30°C*	0.85 Hz	1.2 Hz	0.9 Hz
颚式钳关闭时间 *Jaw closing time*	0.24 s	0.31 s	0.39 s
抓持器工作时间 *Working gripper time*	0.43 s	0.42 s	0.45 s
30°C 环境温度负载循环 *Duty cycle at an ambient temperature of 30°C*	73%	100%	83%
电源 *Power supply*	24 Vdc ±10%	24 Vdc ±10%	24 Vdc ±10%
峰值电流 *Peak current*	0.9 Apk	1.2 Apk	3.8 Apk
标称电流 *Nominal current*	0.3 Arms	0.4 Arms	0.8 Arms
无电刷电机功率 *Brushless motor power*	6 W	11 W	23 W
连接 *Connection*	M8 – 3 极 *M8 - 3 poles*	M8 – 3 极 *M8 - 3 poles*	M8 – 3 极 *M8 - 3 poles*
打开/关闭输入信号 *Open/closed input signal*	PNP 开路集电极 *PNP open collector*	PNP 开路集电极 *PNP open collector*	PNP 开路集电极 *PNP open collector*
重复精确度 *Repetition accuracy*	0.06°	0.06°	0.06°
运行温度 *Operating temperature*	5° ÷ 60°C	5° ÷ 60°C	5° ÷ 60°C
环境防护等级 *Environmental Degree*	IP54	IP54	IP54
噪音水平 *Noise level*	< 70 dB	< 70 dB	< 70 dB
质量（包括电机） *Mass (motor included)*	210 g	445 g	730 g
最大惯性负载 *Maximum inertial load*	-	-	-
IPA 洁净室认证 *IPA Clean Room Certification*	-	-	-
参考标准 *Reference standards*	EN 61000-6-2 + EC + IS1; EN 61000-6-3 + A1		
重心转动惯量 Jxx *Barycentric moment of inertia*	0.92 $kgcm^2$	3.27 $kgcm^2$	7.56 $kgcm^2$
重心转动惯量 Jyy *Barycentric moment of inertia*	1.19 $kgcm^2$	4.09 $kgcm^2$	9.68 $kgcm^2$
重心转动惯量 Jzz *Barycentric moment of inertia*	0.5 $kgcm^2$	1.62 $kgcm^2$	3.66 $kgcm^2$

抓持力

本电动抓持器可用于外部或内部抓持应用。
部件将被抓持在颚式钳行程内的任意位置。
抓持部件后，弹簧力将固定部件
（电机关闭和零消耗）。
即使停电。
另外，即使停电，抓持器机构也不可逆转。
因此，请勿尝试手动打开或关闭抓持器。

Gripping force

This electric gripper can be used for either external or internal gripping applications.
The part will be gripped in any position within the jaw stroke.
After the part is gripped, the spring force will hold the part (motor OFF and ZERO consumption).
Even in case of power black-out.
Furthermore the gripper mechanism is irreversible, even without power supply.
So do not attempt to open or close the gripper manually.

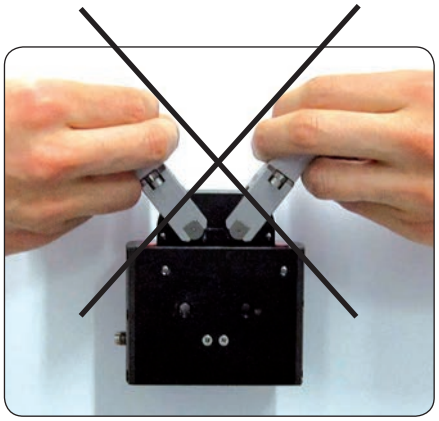

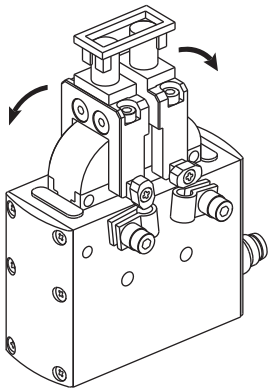

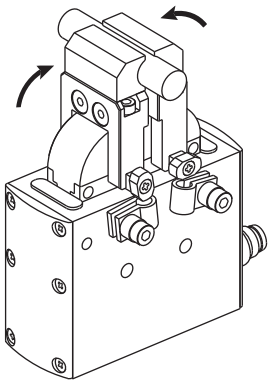

图形以抓持工具长度 Z 和伸出长度 X 为函数显示每个颚式钳的抓持力。

The graphs show the gripping force on each jaw, as a function of the gripping tool length Z and the overhanging X.

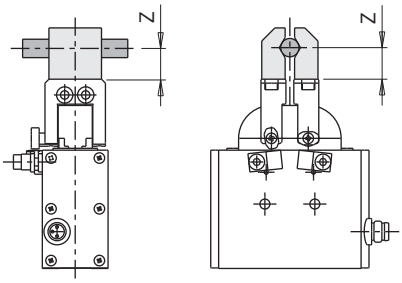

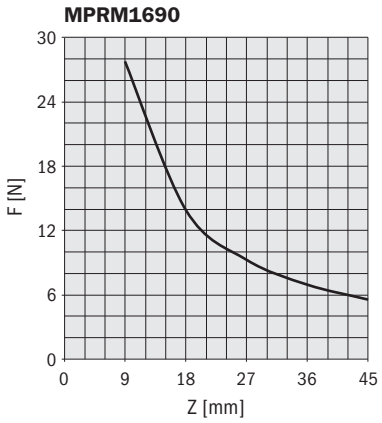

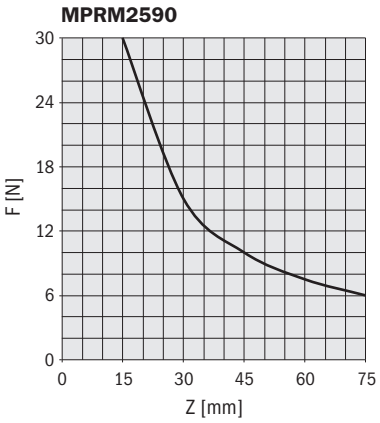

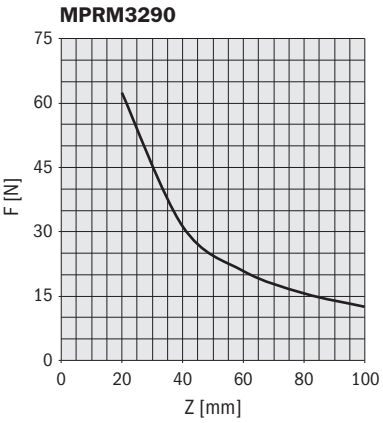

尺寸（毫米）
Dimensions (mm)

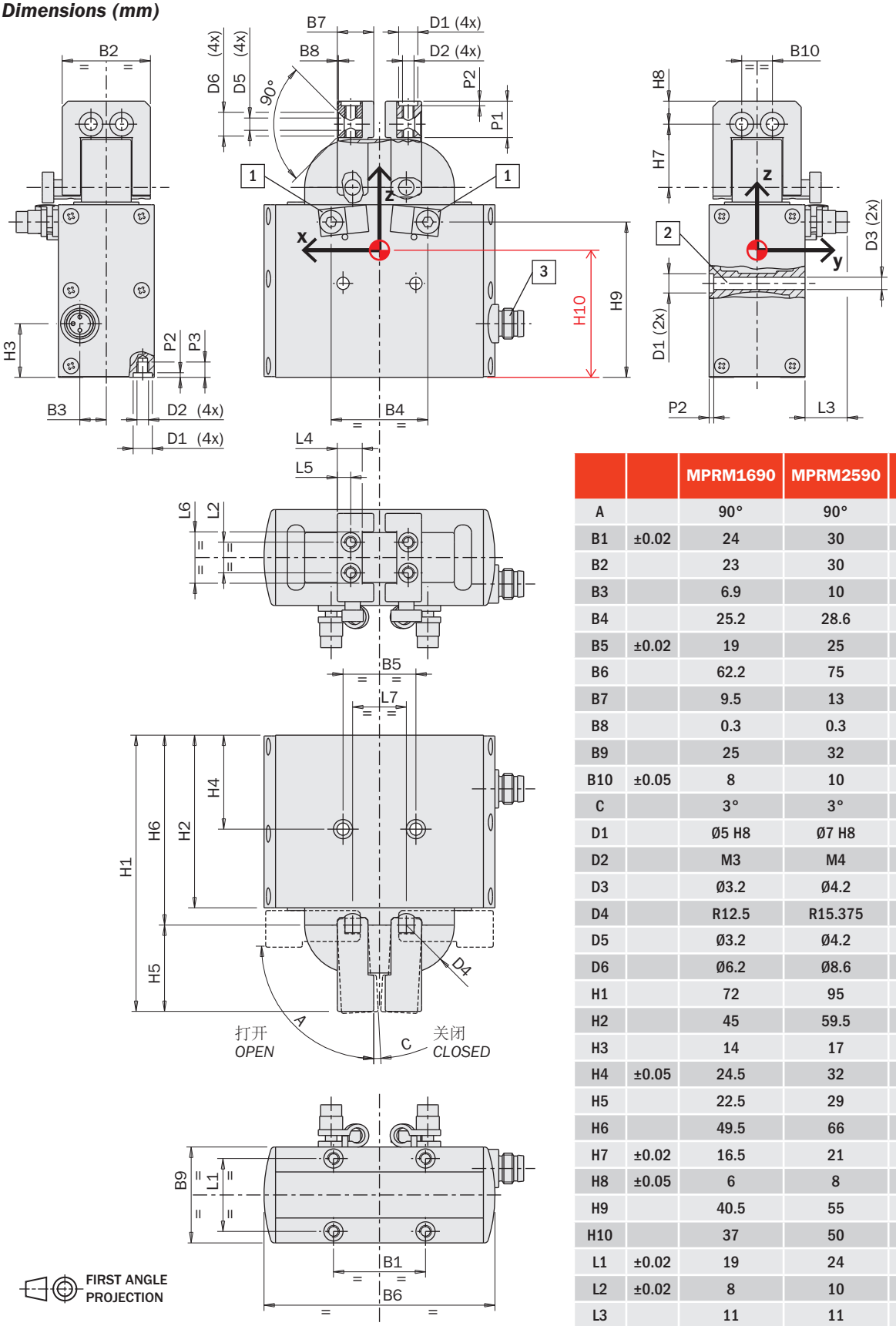

		MPRM1690	MPRM2590	MPRM3290
A		90°	90°	90°
B1	±0.02	24	30	36
B2		23	30	34
B3		6.9	10	11
B4		25.2	28.6	33
B5	±0.02	19	25	30
B6		62.2	75	89
B7		9.5	13	16
B8		0.3	0.3	0.3
B9		25	32	35
B10	±0.05	8	10	12
C		3°	3°	3°
D1		Ø5 H8	Ø7 H8	Ø7 H8
D2		M3	M4	M5
D3		Ø3.2	Ø4.2	Ø5.2
D4		R12.5	R15.375	R18
D5		Ø3.2	Ø4.2	Ø5.2
D6		Ø6.2	Ø8.6	Ø10
H1		72	95	111
H2		45	59.5	68.5
H3		14	17	19
H4	±0.05	24.5	32	38
H5		22.5	29	34
H6		49.5	66	77
H7	±0.02	16.5	21	24.5
H8	±0.05	6	8	9.5
H9		40.5	55	64
H10		37	50	58.6
L1	±0.02	19	24	26
L2	±0.02	8	10	12
L3		11	11	11
L4		6.5	9	11
L5	±0.02	3.5	5	5
L6		13.4	18.4	20.4
L7		14	17.5	22
P1		9.5	12.5	15
P2	+0.1	1.2	1.5	1.5
P3		4	6	8

1 电感式传感器支架
Inductive sensor bracket

2 抓持器紧固通孔
Through hole for gripper fastening

3 电气连接
Connexion électrique

电气连接

带有 3 极的 M8 标准连接器可以提供 24 伏直流电源以及关闭/打开信号 (ON/OFF)。

不需要其它电子部件驱动抓持器。

Electrical connection

It is possible to provide the power supply at 24Vdc and the and the closing/opening signal (ON/OFF) by the M8 standard connector with 3 poles.

No further electronics is necessary to drive the gripper.

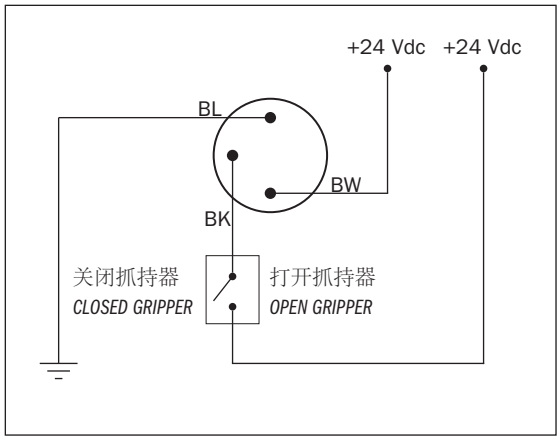

可选 M8x1 标准阴性连接器。
Gimatic 代码： CFGM800325P / CFGM890325P。

Optional M8x1 standard female connector.
Gimatic code: CFGM800325P / CFGM890325P.

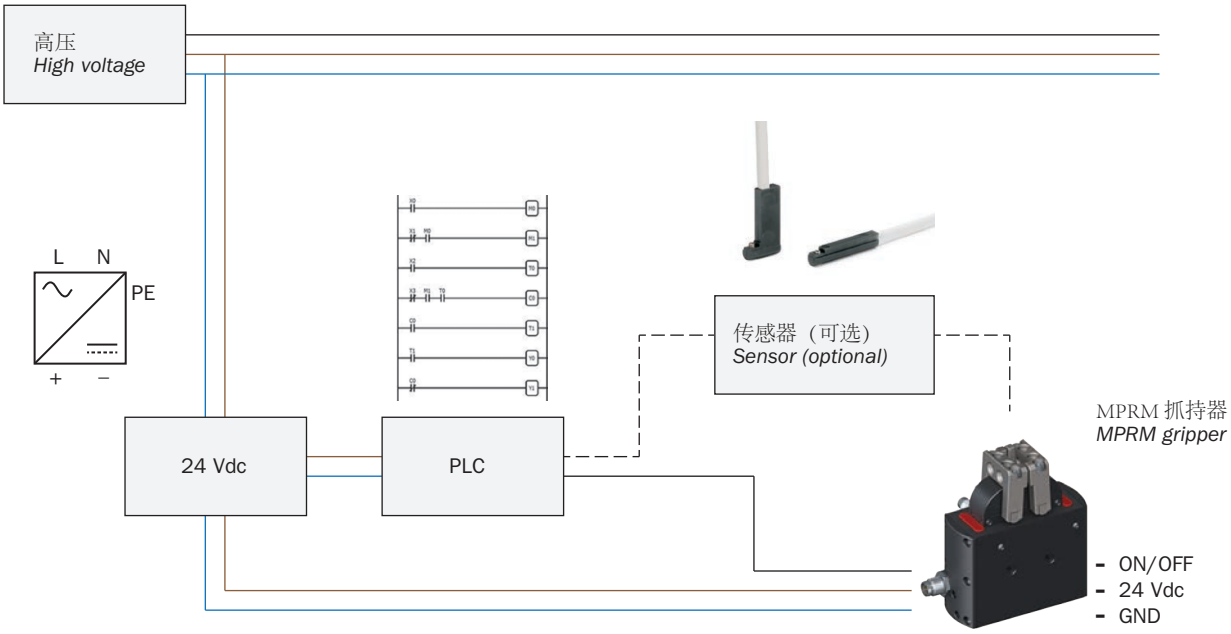

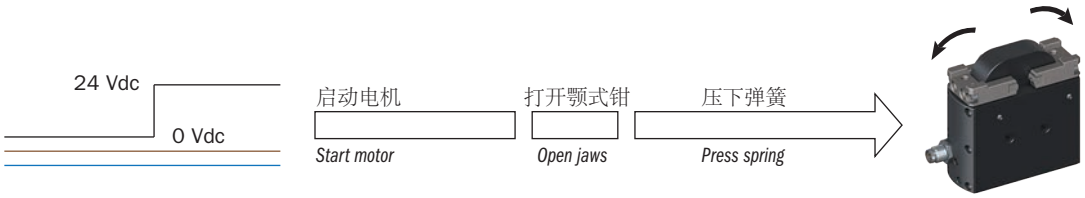

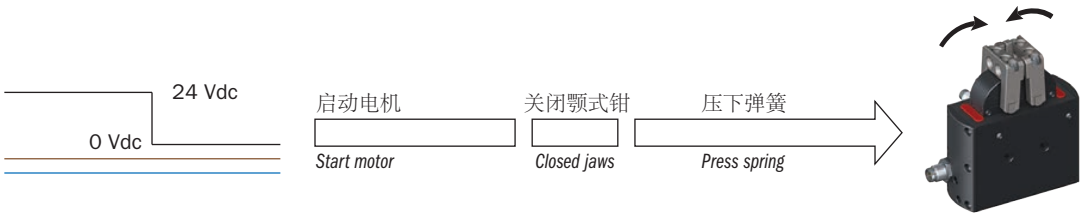

电感式传感器（可选）

采用包装内提供的支架固定的 ⌧4 毫米电感式传感器（可选）检测运行位置。
适当调整相关螺母的位置可以更改传感器的开关点。
有关详细信息，请参见“附件”部分。

Inductive sensors (optional)

The operating position is detected by Ø4mm inductive sensors (optional) fixed with brackets included in the package.
The switch-on point of the sensors can be changed by suitably adjusting the position of the relevant nut.
For details, see the "Accessories" section.

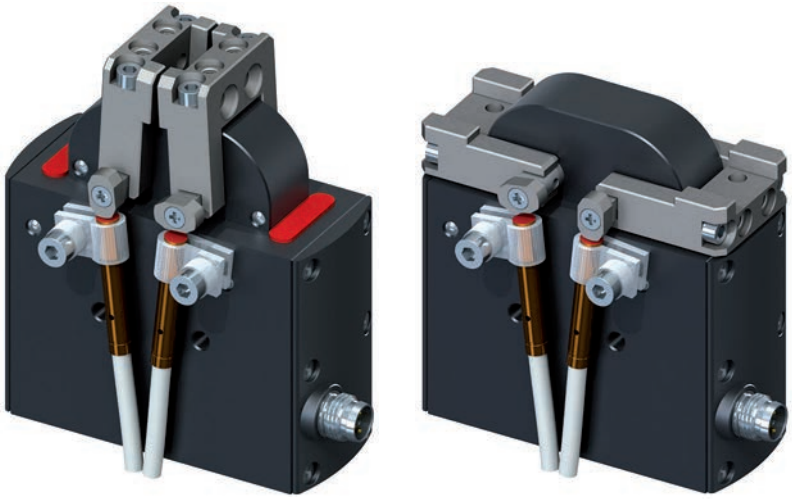

安全负载

检查表中的最大允许负载。
力度或扭矩过大会损坏抓持器，引起运行问题以及危及操作人员的安全。
F s、Mx s、My s、Mz s 为配有静止颚式钳的静态条件下的最大允许负载。
J 是每个抓持工具上的最大允许转动惯量。

Safety loads

Check the table for the maximum permitted loads.
Excessive forces or torques can damage the gripper, cause operation problems and endanger the safety of the operator.
F s, Mx s, My s, Mz s, are the maximum permitted loads under static conditions, that is with motionless jaws.
J is the maximum permitted moment of inertia on each gripping tool.

	MPRM1690	MPRM2590	MPRM3290
F s	50 N	80 N	140 N
Mx s	0.5 Nm	1 Nm	2.5 Nm
My s	1 Nm	2 Nm	5 Nm
Mz s	1 Nm	2 Nm	5 Nm
J	0.3 kgcm²	1.5 kgcm²	3 kgcm²

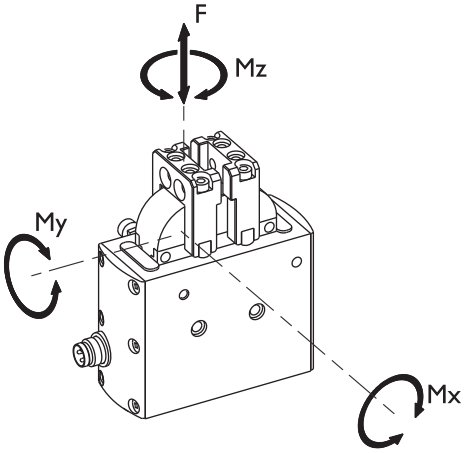

紧固抓持器

抓持器可以紧固到静态或移动部件上。
位于移动部件上时，必须注意承受抓持器及其负载的惯性力。

- 要将抓持器紧固到底座上，使用通过安装板旋入抓持器内的四个螺丝 (SA)。
- 要紧固抓持器侧部，使用通孔 (D3) 内的两个螺丝 (SB)。

在每种情况下，放置包装内提供的两个对中衬套 (BA)。检查表中安装板内其外罩的尺寸（DA 和 PA）。

Gripper fastening

The gripper can be fastened to a static or moving part.
When on a moving part, you must pay attention to the inertial force to which the gripper and its load are subjected.

- *To fasten gripper to base, use four screws (SA) through the mounting plate, screwed in the gripper.*
- *To fasten the gripper side, use two screws (SB) in the through holes (D3).*

In every case, put the two centering sleeves (BA), which are supplied in the package. Check the dimensions (DA and PA) in the table for their housings in the mounting plate.

	MPRM1690	MPRM2590	MPRM3290
B9	25	32	35
D3	Ø3.2	Ø4.2	Ø5.2
DA	Ø5 h7	Ø7 h7	Ø7 h7
P3	4	6	8
PA	1.2	1.5	1.5
SA	M3	M4	M5
SB	M3	M4	M5

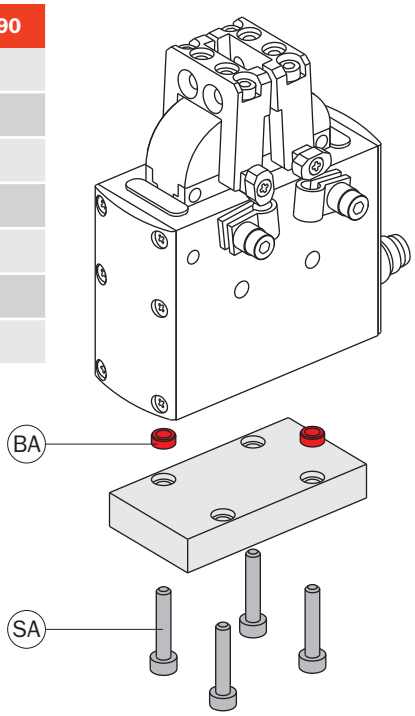

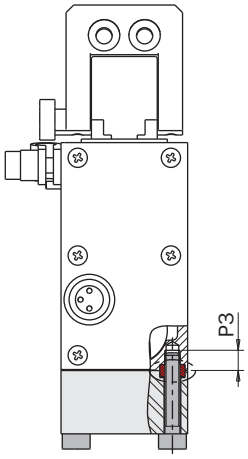

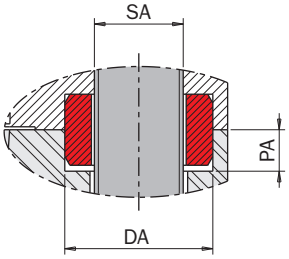

包装内提供用于抓持工具的 4 个对中环 (BA) 和用于外罩的 2 个对中衬套 (BA)。

4 centering rings (BA) for the gripping tools and 2 centering sleeves (BA) for the housing are supplied in the packaging.

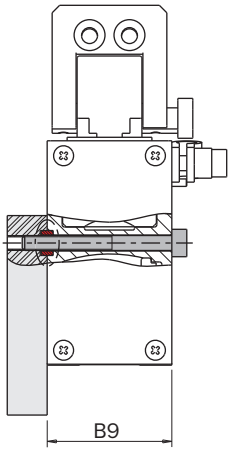

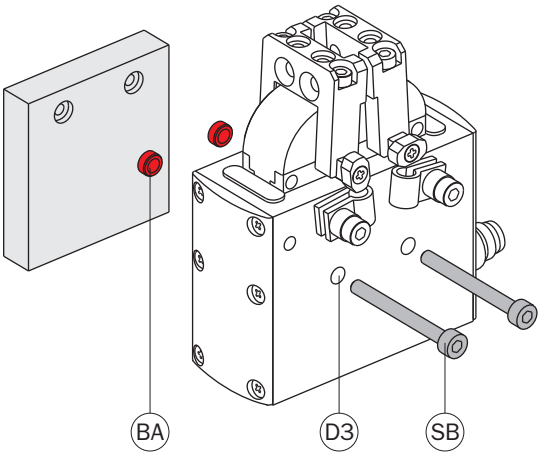

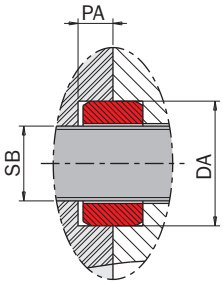

09/2016

紧固抓持工具

抓持工具必须尽可能短而轻。
必须采用颚式钳校准孔 (D1) 内的两个螺丝 (SC) 和两个对中衬套 (BA) 对其进行紧固。

Gripping tool fastening

The gripping tools should be as short and light as possible. They have to be fastened by two screws (SC) and two centering sleeves (BA) in the calibrated holes (D1) of the jaws.

	MPRM1690	MPRM2590	MPRM3290
DA	Ø5 h7	Ø7 h7	Ø7 h7
P1	9.5	12.5	15
PA	1.2	1.5	1.5
SC	M3	M4	M5

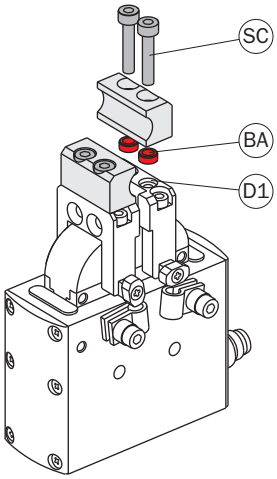

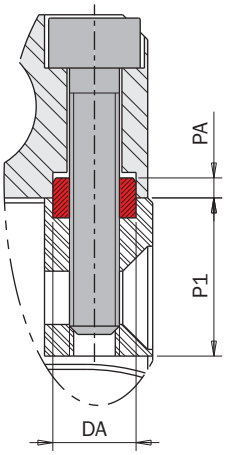

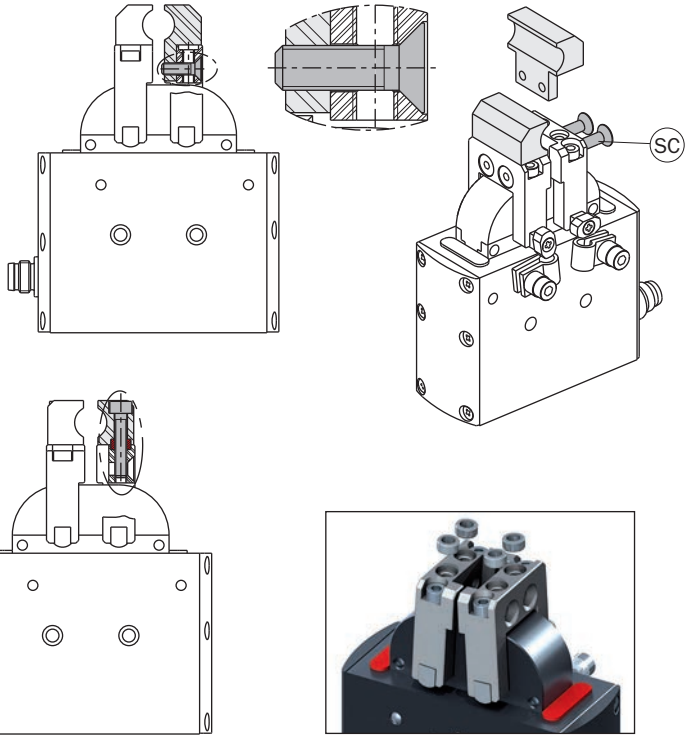

系列兼容性

MPRM 系列抓持器完美兼容 MRE 系列旋转执行器，无需使用任何特殊板。

Serie compatibility

MPRM grippers series is perfectly compatible with MRE rotary series actuators without any special plate.

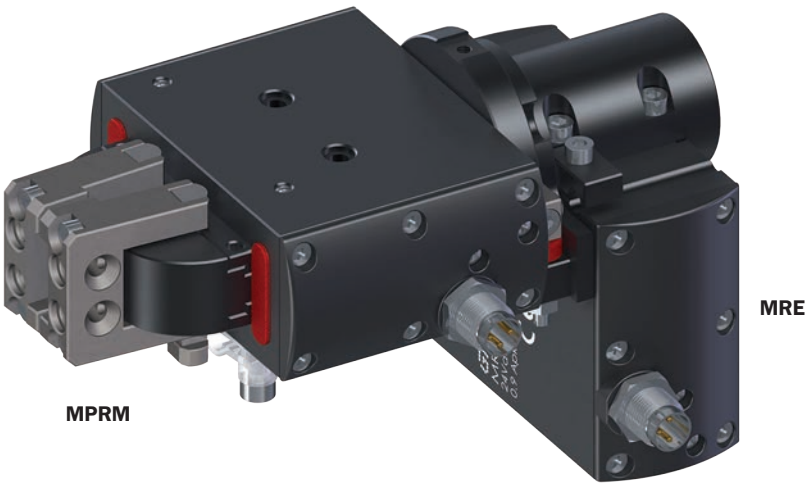

2 位置电动旋转执行器

- 适合机械设置的 90° 或 180° 旋转角度。
- 即插即用用户友好型抓持器。
- 执行器在位时无电力消耗。
- 不要求编程。
- 断电时保证保持位置。
- 长寿型无电刷电机（无电刷直流电机）。
- 内置式电机驱动器。
- 24 伏直流低压电源。
- M8x1 3 极标准连接。
- PLC 作为气动阀可控。
- 球轴承。
- 纤维碳齿轮减速。
- 1000 万周期免维护。
- 最佳平衡重量、尺寸和力度。
- 兼容MPPM电动抓持器。
- 可选电感式传感器。

2 position electrical rotary actuator

- *Suitable for 90° or 180° rotation angle mechanically set.*
- *Plug & play user friendly gripper.*
- *No electricity consumption when actuator is in position.*
- *No programming required.*
- *Guarantee of position kept in the event of power blackout.*
- *Long life Brushless motor (Brushless DC).*
- *Built-in motor driver.*
- *24 Vdc Low Voltage Power Supply.*
- *M8x1, 3 poles standard connection.*
- *Controllable by PLC as a pneumatic valve.*
- *Ball bearings.*
- *Fiber-carbon gear reduction.*
- *10 million cycle maintenance-free.*
- *Weight-dimensions-force best trade off.*
- *Compatible with MPPM electric grippers.*
- *Optional inductive sensors.*

MRE16180

MRE25180

MRE32180

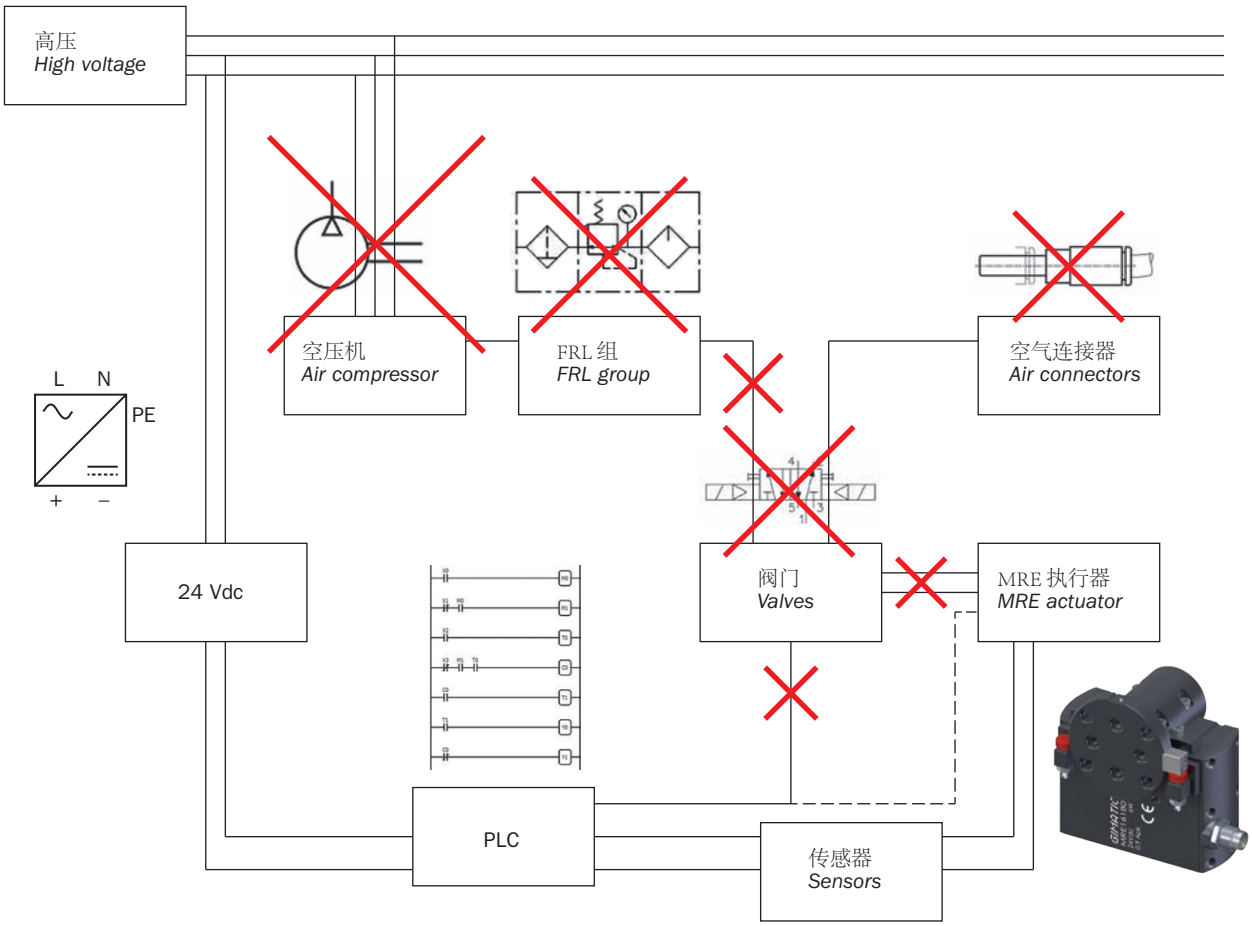

	MRE16180		MRE25180		MRE32180	
旋转扭矩 *Swivelling torque*	45 Ncm		80 Ncm		138 Ncm	
旋转角度 *Swivelling angle*	90°	180°	90°	180°	90°	180°
30° C 环境温度频率 *Frequency at an ambient temperature of 30°C*	0.61 Hz	0.60 Hz	1.46 Hz	0.91 Hz	0.83 Hz	0.62 Hz
无负载旋转时间 *Swivelling time without load*	0.12 s	0.35 s	0.22 s	0.44 s	0.15 s	0.35 s
执行器工作时间 *Working actuator time*	0.35 s	0.57 s	0.33 s	0.55 s	0.36 s	0.57 s
30° C 环境温度负载循环 *Duty cycle at an ambient temperature of 30°C*	46%	66%	99%	100%	39%	79%
电源 *Power supply*	24 Vdc ±10%		24 Vdc ±10%		24 Vdc ±10%	
峰值电流 *Peak current*	0.9 Apk		1.2 Apk		3.8 Apk	
标称电流 *Nominal current*	0.3 Arms		0.4 Arms		0.8 Arms	
无电刷电机功率 *Brushless motor power*	6 W		11 W		23 W	
连接 *Connection*	M8 – 3 极 *M8 - 3 poles*		M8 – 3 极 *M8 - 3 poles*		M8 – 3 极 *M8 - 3 poles*	
打开/关闭输入信号 *Open/closed input signal*	PNP 开路集电极 *PNP open collector*		PNP 开路集电极 *PNP open collector*		PNP 开路集电极 *PNP open collector*	
重复精确度 *Repetition accuracy*	0.04°		0.04°		0.04°	
运行温度 *Operating temperature*	5 ÷ 60°C.		5 ÷ 60°C.		5 ÷ 60°C.	
环境防护等级 *Environmental Degree*	IP54		IP54		IP54	
噪音水平 *Noise level*	< 70 dB		< 70 dB		< 70 dB	
质量（包括电机） *Mass (motor included)*	195 g		400 g		738 g	
最大惯性负载 *Maximum inertial load*	6 $kgcm^2$		15 $kgcm^2$		20 $kgcm^2$	
ISO14644-1 洁净室认证 *ISO14644-1 Clean Room Certification*	CLASS 6		-		-	
参考标准 *Reference standards*	EN 61000-6-2 + EC + IS1; EN 61000-6-3 + A1					

旋转角度

MRE 电动旋转执行器能够旋转 90° 或 180°。
固定块 (A) 提供靠在机械止动器 (B) 上的 0° 位置，靠在机械止动器 (C) 上的 180° 位置，移动块 (D) 提供靠在机械止动器(C) 上的 90° 位置。

操作机械止动器可以在每侧调整 +/-4° 的极端位置。

Rotation angle

MRE electrical rotary actuators are able to swivel to 90° or 180°.
The fixed block (A) gives the 0° position against the mechanical stopper (B) and the 180° position against the mechanical stopper (C), while the moving block (D) gives 90° position against the mechanical stopper (C).

Extreme positions can be adjusted by +/- 4° on each side, by acting on the mechanical stoppers.

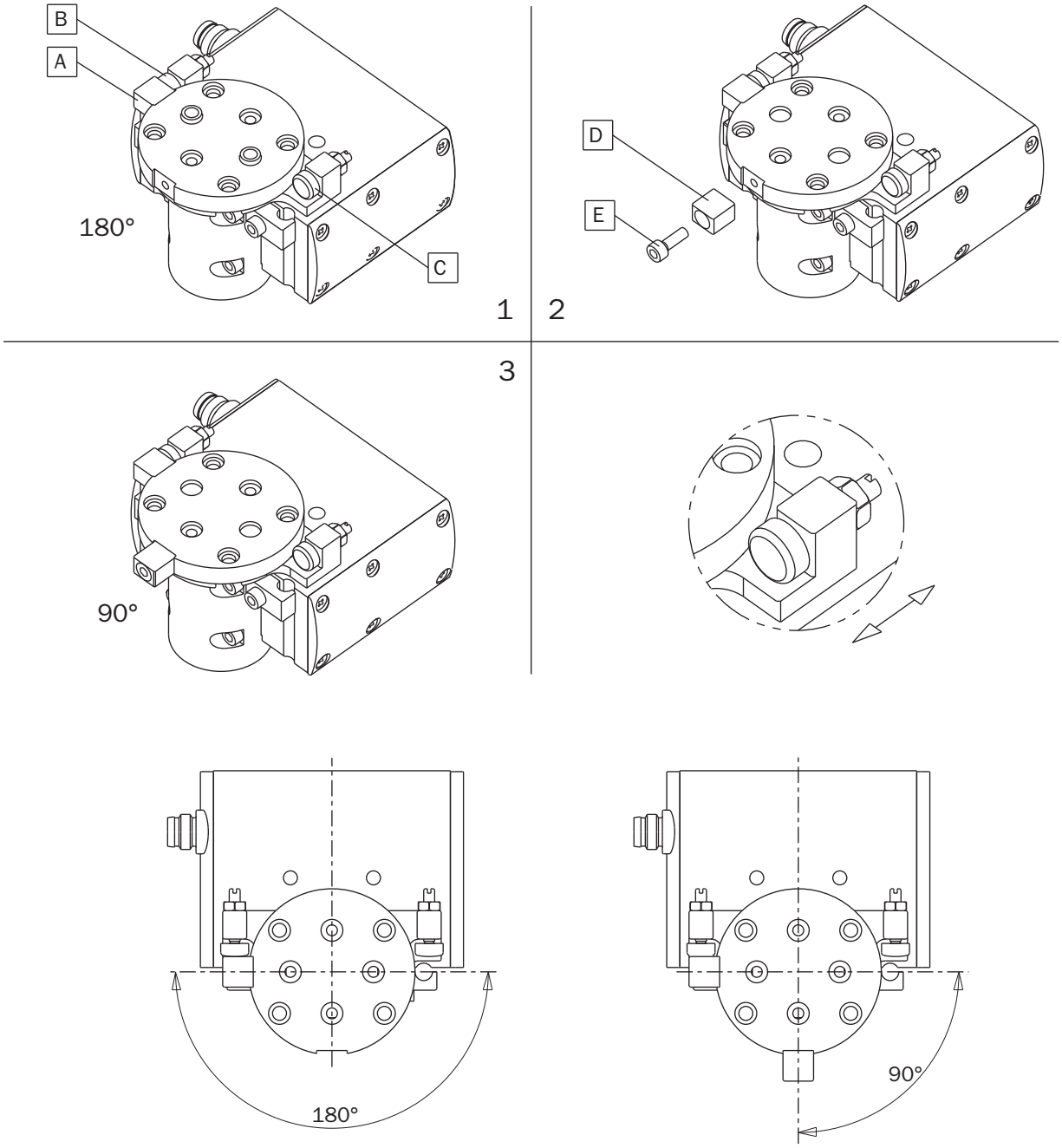

负载的惯性力矩必须低于 6/15/20 千克 · 厘米²。
动能过大会损坏工作台和影响运行。

The moment of inertia of the load must be lower than 6/15/20 kgcm².
Excessive kinetic energy can damage the table and compromise its operation.

尺寸（毫米）
Dimensions (mm)

FIRST ANGLE PROJECTION

1 电感式传感器支架 *Inductive sensor bracket*

2 执行器紧固通孔 *Through hole for actuator fastening*

3 电气连接 *Electrical connection*

4 对中衬套 *Centering sleeves*

5 90° 行程端部止动器 *90° stroke end stopper*

6 可调整行程端部 *Adjustable stroke ends*

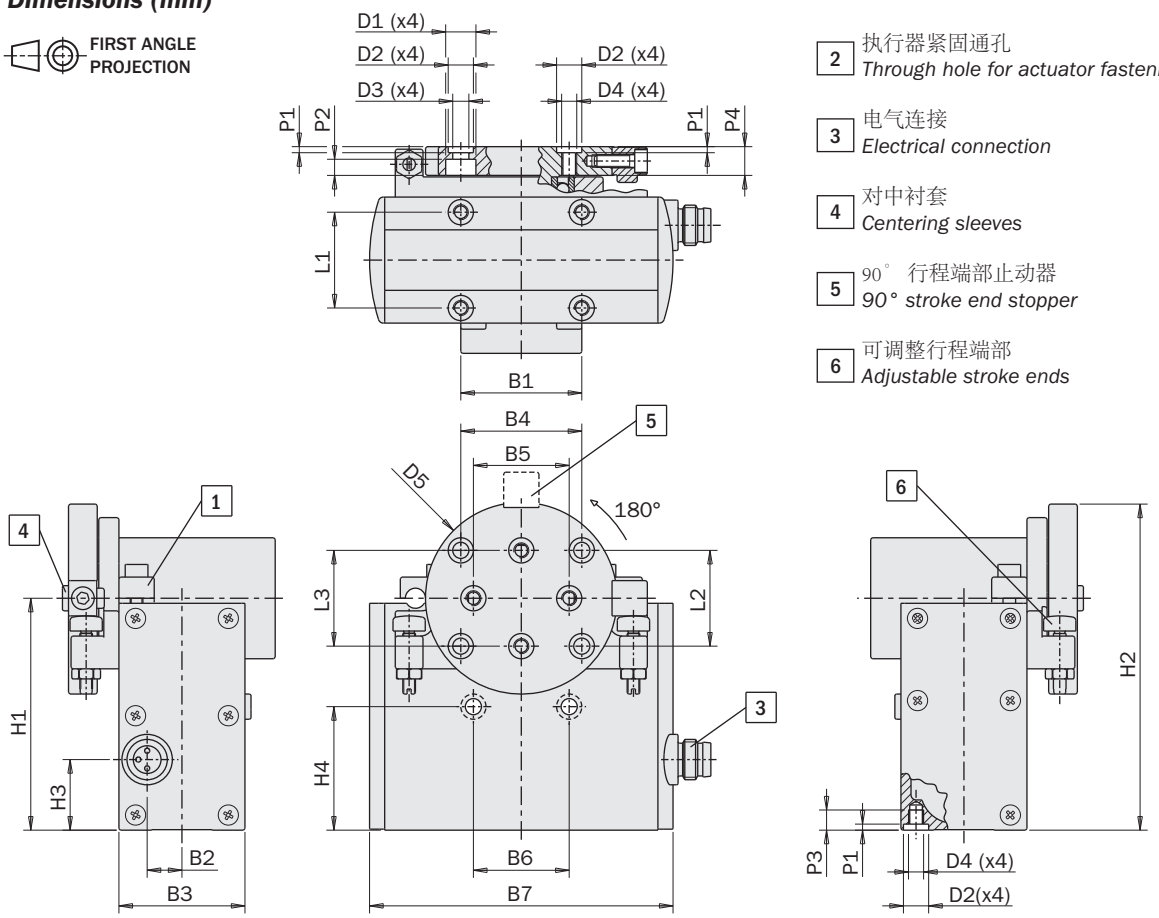

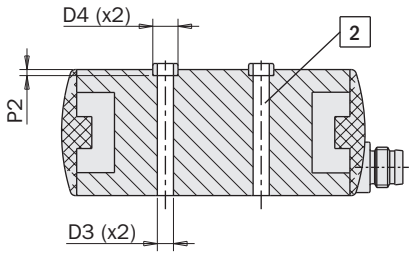

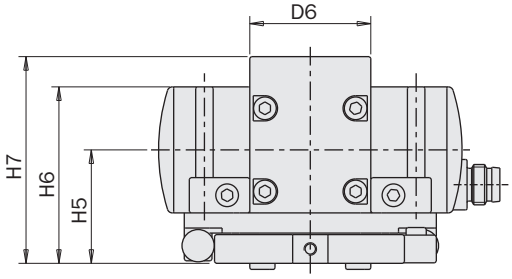

		MRE16180	MRE25180	MRE32180
B1	±0.02	24	30	36
B2	±0.02	6.9	10	11
B3		25	32	35
B4	±0.02	24	30	36
B5	±0.02	19	25	30
B6	±0.02	19	25	30
B7		62.2	75	89
D1		Ø6	Ø7.5	Ø9
D2		Ø5 H8	Ø7 H8	Ø7 H8
D3		Ø3.2	Ø4.2	Ø5.2
D4		M3	M4	M5
D5		Ø38	Ø46	Ø55
D6		Ø24	Ø27	Ø31
H1		46	58.8	67.5
H2		65	81.8	95
H3		14	17	19
H4	±0.02	24.5	32	38
H5		22.5	28.5	33
H6		35	43.5	50.5
H7		41	52	60
L1	±0.02	19	24	26
L2	±0.02	19	24	26
L3	±0.02	19	25	30
P1		1.2	1.5	1.5
P2	+0.1	3.2	4.1	5
P3		4	6	8
P4		5.7	7.2	8.7

电气连接

旋转执行器配有一个用于 24 伏直流电源和旋转信号的 3 极 M8 连接器。

不需要其它电子部件驱动执行器。

Electrical connection

The rotary actuator is equipped with a 3-pole M8 connector for the 24Vdc power supply and the swiveling signal.

No further electronics is necessary to drive the actuator.

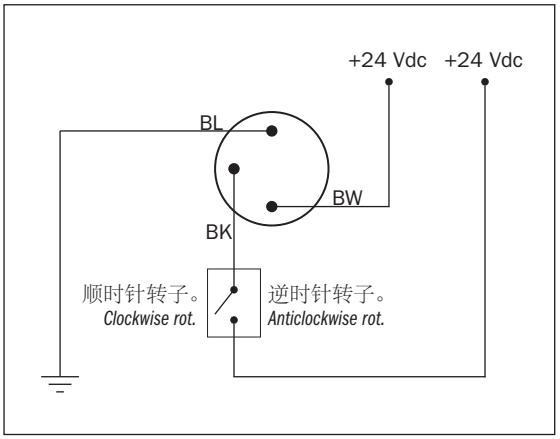

可选 M8x1 标准阴性连接器。
Gimatic 代码: CFGM800325P / CFGM890325P。

Optional M8x1 standard female connector.
Gimatic code: CFGM800325P / CFGM890325P.

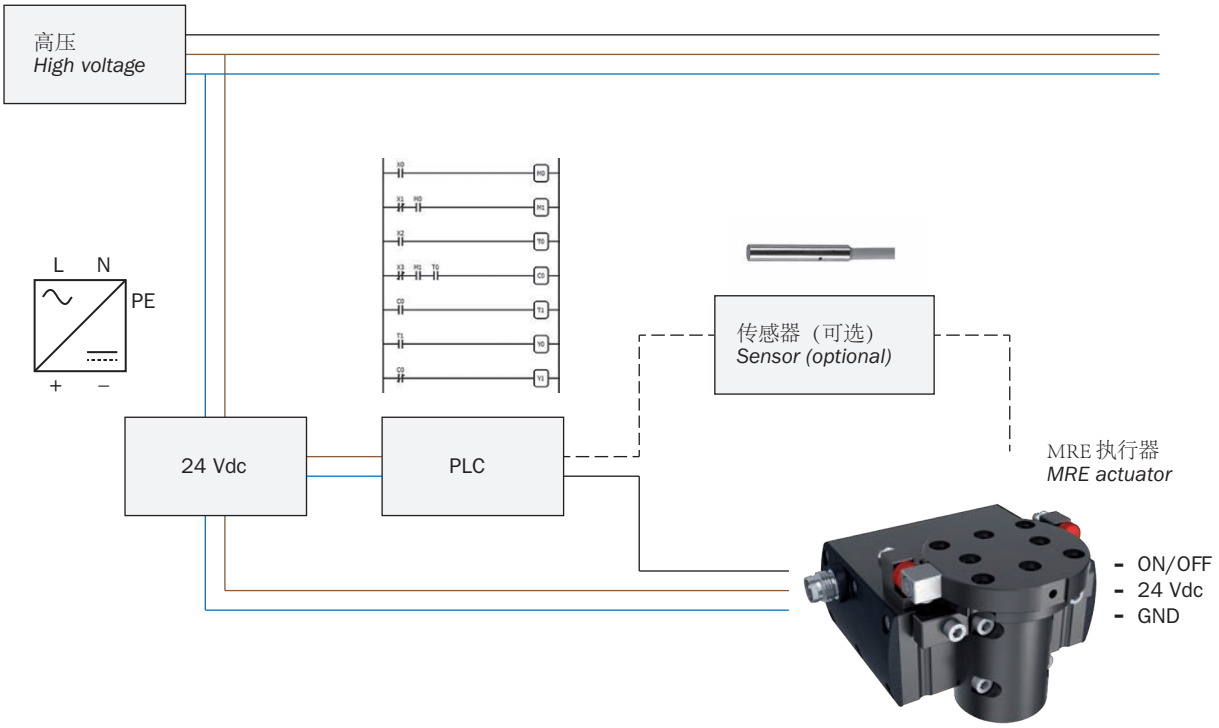

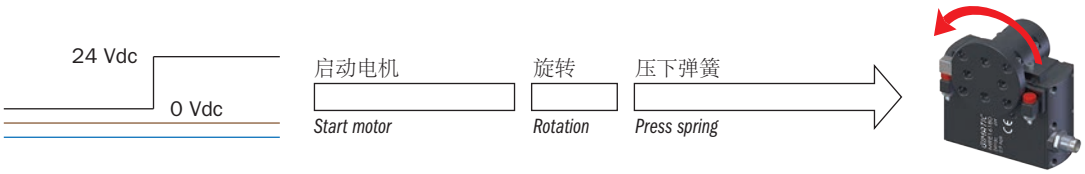

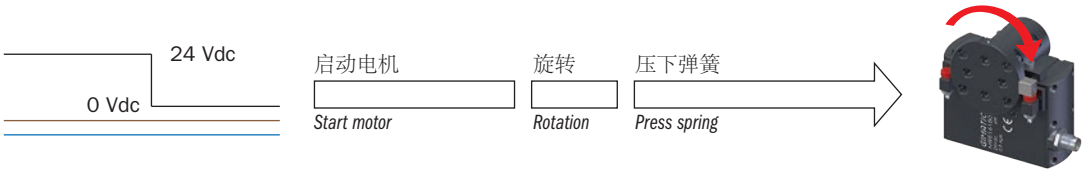

传感器

通过行程端块采用一个或多个电感式传感器（可选）检测运行位置。

可以使用的传感器：

SI4M225-G	NPN	2.5 米线缆 *2.5m Cable*
SI4N225-G	PNP	2.5 米线缆 *2.5m Cable*

Sensors

The operating position is detected by one or more inductive sensors (optional) by means of the stroke end block.

The sensors that can be used are:

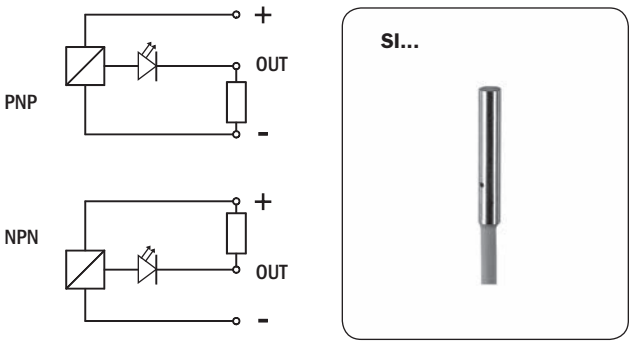

安全负载

检查工作台的最大允许负载。
负载过大会损坏工作台和影响运行。

Safety loads

Check the table for maximum permitted loads.
Excessive loads can damage the table and compromise its operation.

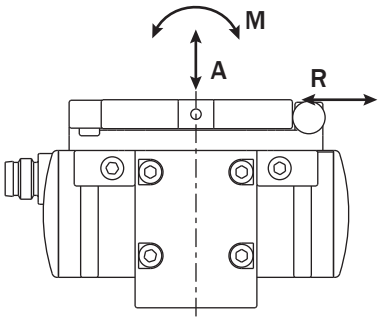

	MRE16180	MRE25180	MRE32180
A	140 N	160 N	240 N
R	170 N	190 N	290 N
M	4.5 Nm	7 Nm	11.5 Nm

安装旋转执行器

旋转执行器可以安装在固定位置或者移动部件上。
位于移动部件上时，必须注意承受抓持器及其负载的惯性力。

- 要用其基座紧固执行器，用四个通过螺丝 (SA) 穿过安装板并将其拧入单元。
- 要紧固执行器侧部，使用通孔 (D3) 内的两个螺丝 (SB)。

在每种情况下，使用包装内提供的两个对中衬套 (BA)。检查表中安装板内其座子的尺寸（DA 和 PA）。

Fitting the rotary actuator

The rotary actuator can be fitted in a fixed position or to moving parts.
When on a moving part, you must pay attention to the inertial force to which the gripper and its load are subjected.

- *To fasten the actuator by its base, use four through-screws (SA) through the mounting plate and screw it to the unit.*
- *To fasten the actuator by its side, use two screws (SB) in the through-holes (D3).*

In every case, use the two centering sleeves (BA) supplied in the package. Follow the dimensions (DA and PA) given in the table for their seats in the mounting plate.

	MRE16180	MRE25180	MRE32180
B4	25	32	35
D3	Ø3.2	Ø4.2	Ø5.2
DA	Ø5 h7	Ø7 h7	Ø7 h7
P3	4	6	8
PA	1.2	1.5	1.5
SA	M3	M4	M5
SB	M3	M4	M5

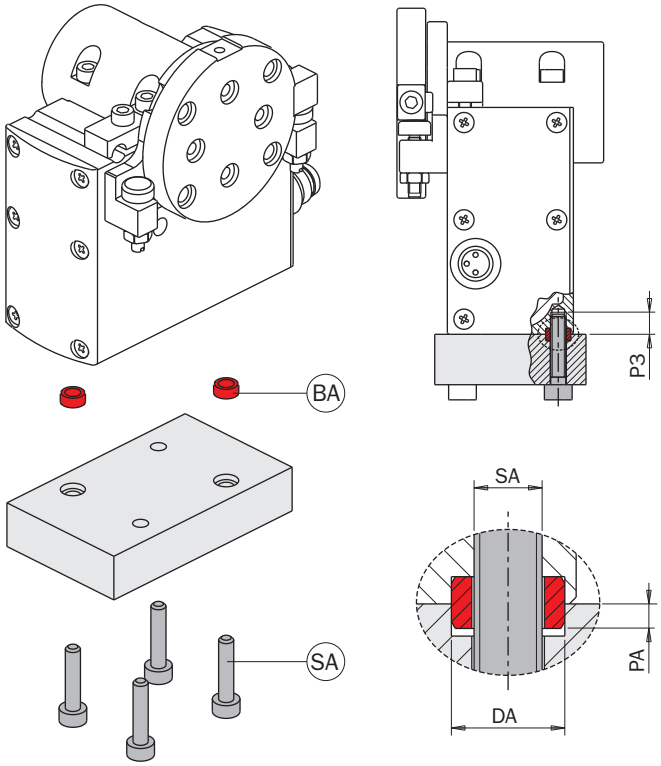

包装内提供用于盘的 2 个对中环 (BA) 和用于主体的 2 个对中衬套 (BA)。

2 centering rings (BA) for the disc and 2 centering sleeves (BA) for the body are supplied in the package.

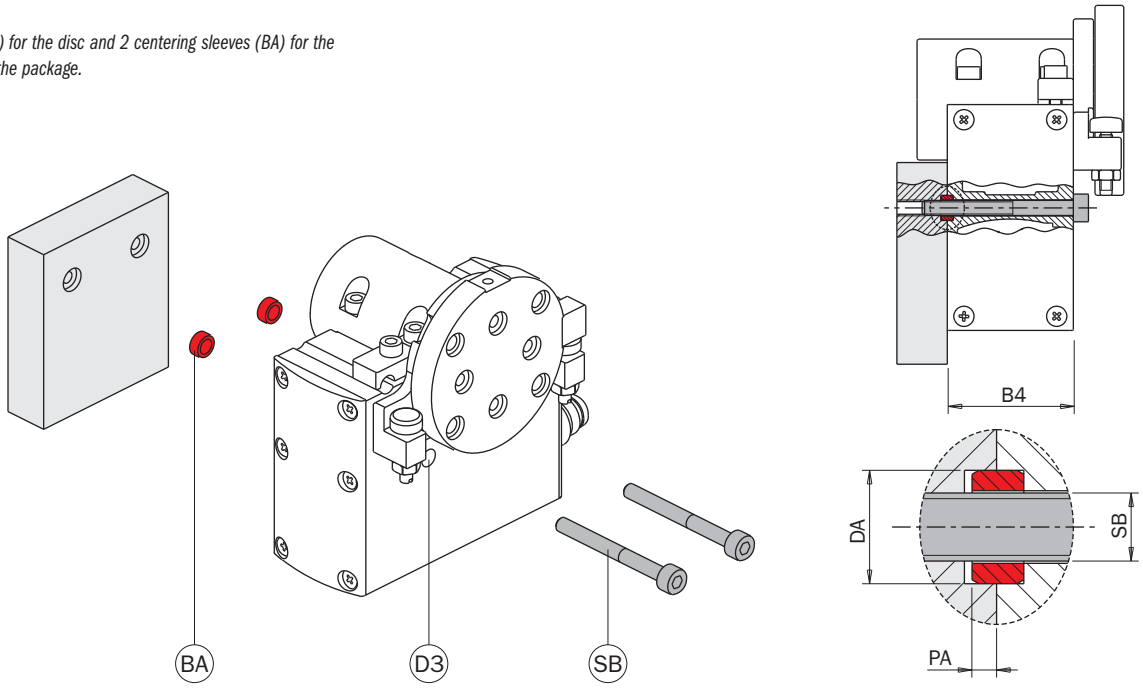

系列兼容性

MRE 系列电动旋转执行器兼容 MPPM 系列抓持器执行器，无需使用任何特殊板。

Series compatibility

MRE electric rotary actuator series is perfectly compatible with MPPM grippers series actuators without any special plate.

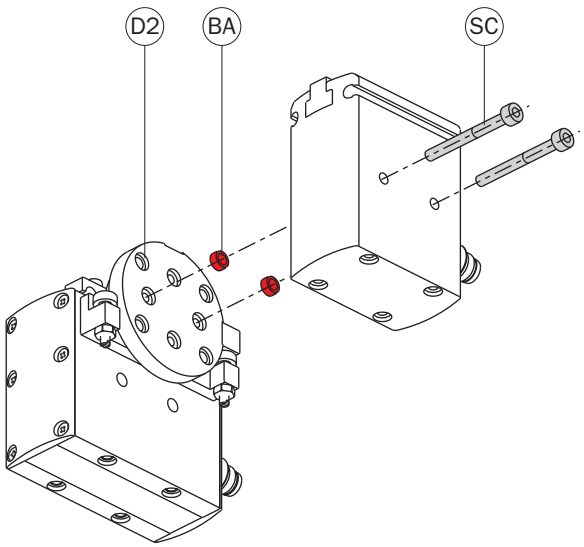

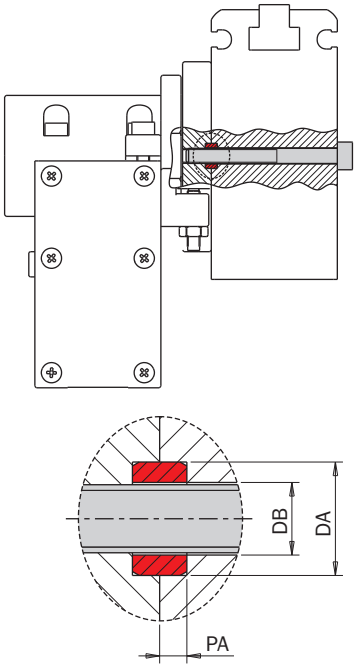

	MRE16180	MRE25180	MRE32180
DA	Ø5 h7	Ø7 h7	Ø7 h7
DB	Ø3.2	Ø4.2	Ø5.2
DC	M3	M4	M5
SC	M3	M4	M5

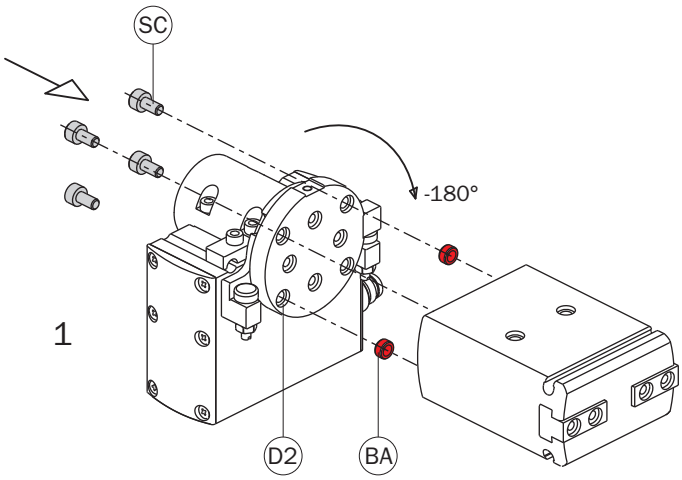

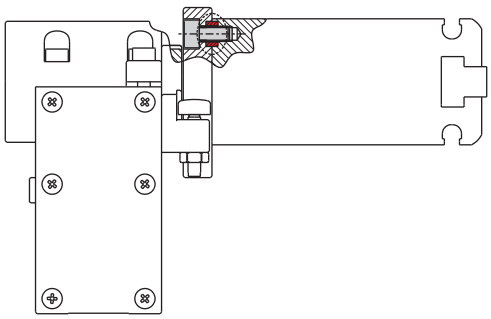

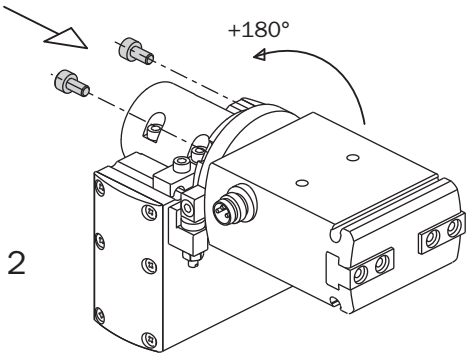

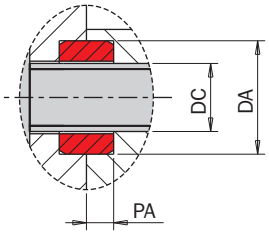

电动分度工作台

- 提供 4、6、8 或 12 个位置。
- 提供顺时针型（C 结尾）或逆时针型（A 结尾）。
- 高扭矩。
- 适合重负载。
- 意外堵塞时机械指数复位。
- 即插即用用户友好型抓持器。
- 分度工作台在位时无电力消耗。
- 不要求编程。
- 断电时保证保持位置。
- 长寿型无电刷电机（无电刷直流电机）。
- 内置式电机驱动器。
- 24 伏直流低压电源。
- M8x1 3 极标准连接。
- PLC 作为气动阀可控。
- 球轴承。
- 纤维碳齿轮减速。
- 1000 万周期免维护。
- 可选磁性传感器。

Electric indexing tables

- *Available with 4, 6, 8 or 12 positions.*
- *Available clockwise (ending C) or counter clockwise (ending A).*
- *High torque.*
- *Suitable for heavy loads.*
- *Mechanical indexing reset in the case of accidental block.*
- *Plug & play user friendly gripper.*
- *No electricity consumption when the indexing table is in position.*
- *No programming required.*
- *Guarantee of position kept in the event of power blackout.*
- *Long life Brushless motor (Brushless DC).*
- *Built-in motor drive.*
- *24 Vdc Low Voltage Power Supply.*
- *M8x1, 3 poles standard connection.*
- *Controllable by PLC as a pneumatic valve.*
- *Ball bearings.*
- *Fiber-carbon gear reduction.*
- *10 million cycle maintenance-free.*
- *Optional magnetic sensors.*

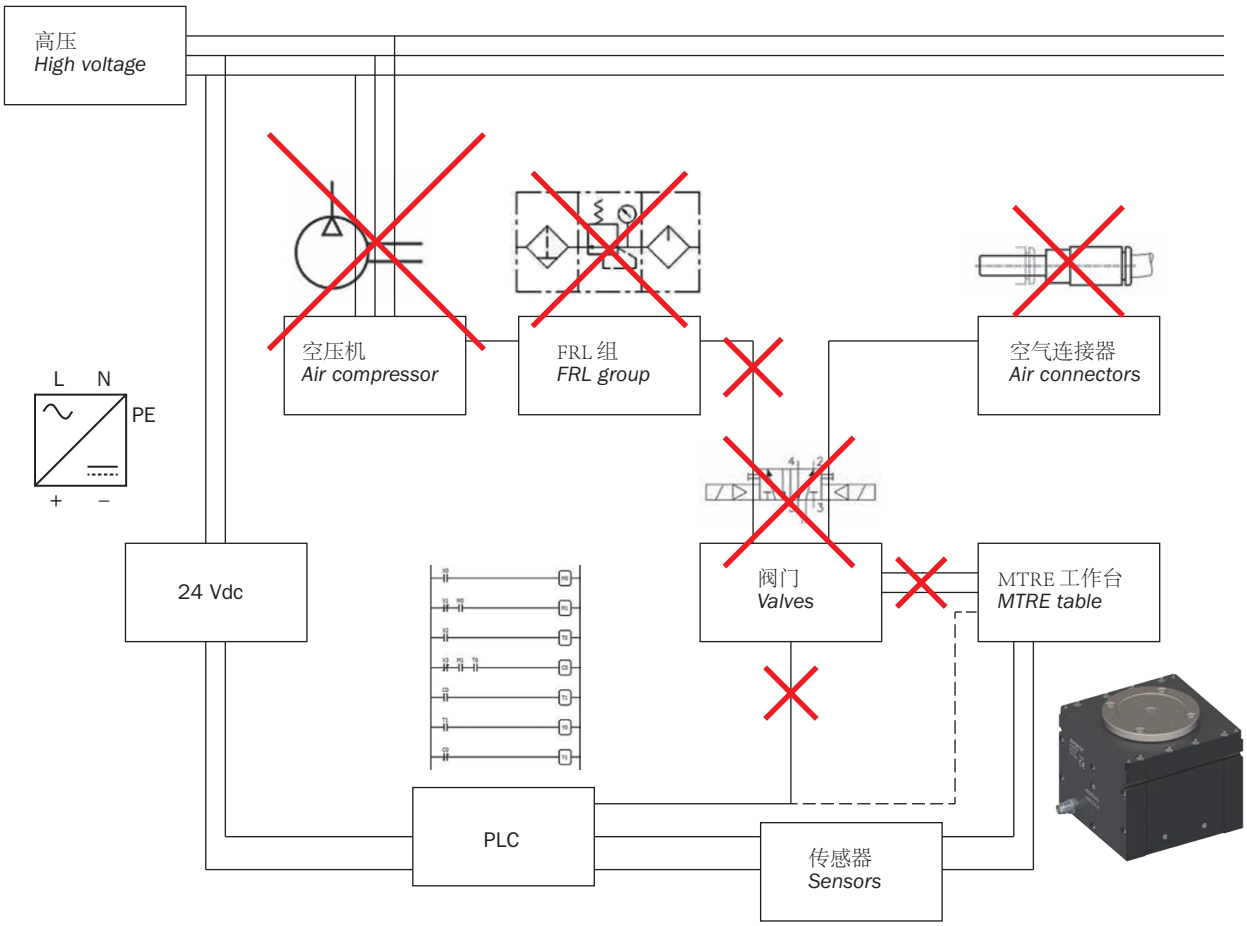

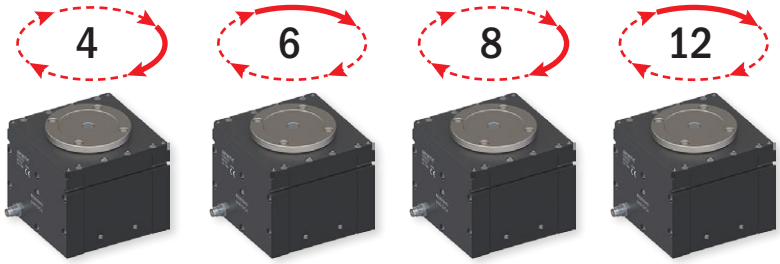

	MTRE3204C MTRE3204A	MTRE3206C MTRE3206A	MTRE3208C MTRE3208A	MTRE3212C MTRE3212A
旋转扭矩 *Swivelling torque*	196 Ncm	196 Ncm	196 Ncm	196 Ncm
旋转角度 *Swivelling angle*	4x90°	6x60°	8x45°	12x30°
30° C 环境温度频率 *Frequency at an ambient temperature of 30°C*	0.95 Hz	0.9 Hz	0.85 Hz	0.8 Hz
无负载旋转时间 *Swivelling time without load*	0.47 s	0.36 s	0.29 s	0.19 s
执行器工作时间 *Working actuator time*	0.53 s	0.43 s	0.47 s	0.29 s
30° C 环境温度负载循环 *Duty cycle at an ambient temperature of 30°C*	100%	80%	60%	50%
电源 *Power supply*	24 Vdc ±10%	24 Vdc ±10%	24 Vdc ±10%	24 Vdc ±10%
峰值电流 *Peak current*	3.8 Apk	3.8 Apk	3.8 Apk	3.8 Apk
标称电流 *Nominal current*	0.8 Arms	0.8 Arms	0.8 Arms	0.8 Arms
无电刷电机功率 *Brushless motor power*	23 W	23 W	23 W	23 W
连接 *Connection*	M8 - 3极 *M8 - 3 poles*			
打开/关闭输入信号 *Open/closed input signal*	PNP 开路集电极 *PNP open collector*			
角度精密 *Angular precision*	±0.10°	±0.10°	±0.10°	±0.10°
定位重复性 (360°) *Positioning repeatability*	0.02°	0.02°	0.02°	0.02°
运行温度 *Operating temperature*	5 ÷ 60°C.	5 ÷ 60°C.	5 ÷ 60°C.	5 ÷ 60°C.
环境防护等级 *Environmental Degree*	IP54	IP54	IP54	IP54
噪音水平 *Noise level*	< 70 dB	< 70 dB	< 70 dB	< 70 dB
质量（包括电机） *Mass (motor included)*	1800 g	1800 g	1800 g	1800 g
最大惯性负载 (J) *Maximum inertial load*	240 $kgcm^2$	240 $kgcm^2$	240 $kgcm^2$	240 $kgcm^2$
IPA 洁净室认证 *IPA Clean Room Certification*	-	-	-	-
参考标准 *Reference standards*	EN 61000-6-2 + EC + IS1; EN 61000-6-3 + A1			

步骤重置

MTRE 工作台配有一个特殊分度系统，能够以 90°、60°、45° 或 30° 步进的机械止动器顺时针或逆时针旋转。
如果旋转意外受阻 (1)，则可以用工作台旁边的螺丝重置机械同步器。
当螺丝打开时，系统不再啮合 (2)，因此可以提供一些电动脉冲 (3) 调整机械系统的相位。
之后可以关闭螺丝 (4) 并开始工作台的正常工作 (5)。

Step re-setting

MTRE tables are equipped by a special indexing system that is able to rotate in clockwise or anticlockwise rotation with mechanical stop every 90°, 60°, 45° or 30° step.
In case of accidental swivel blockage (1) it is possible to reset the mechanical synchronism by a screw beside the table.
When the screw is open the system is no more engaged (2) so that is possible to provide some electrical impulses (3) to phase mechanical system.
After that is possible to close the screw (4) and start correct working of the table (5).

1

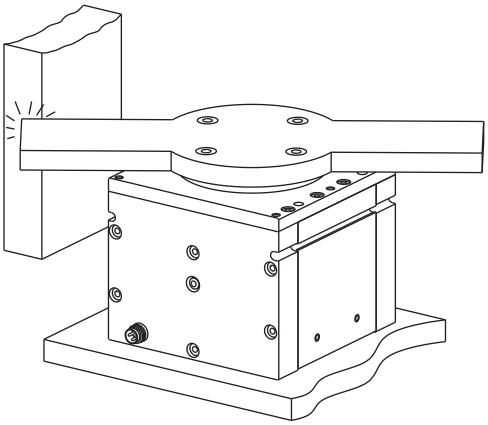

2

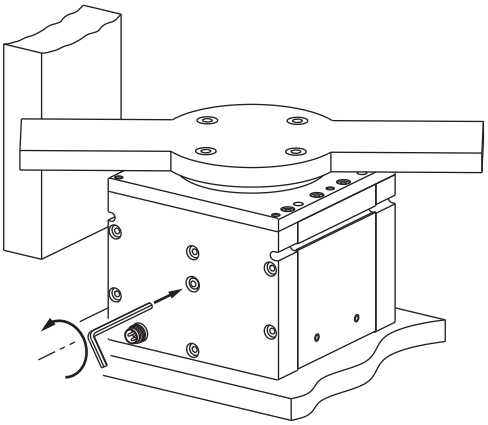

3

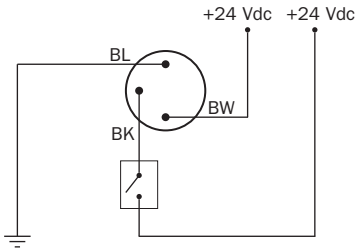

4

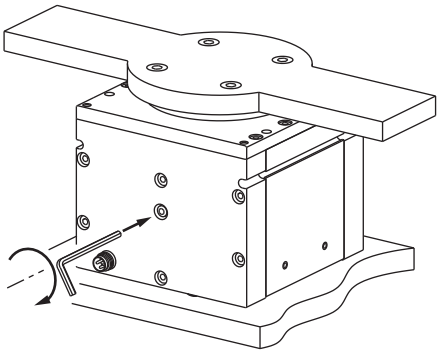

5

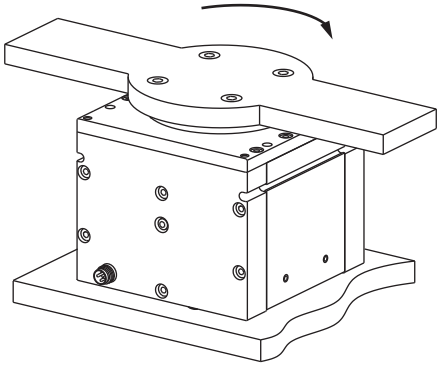

尺寸（毫米）
Dimensions (mm)

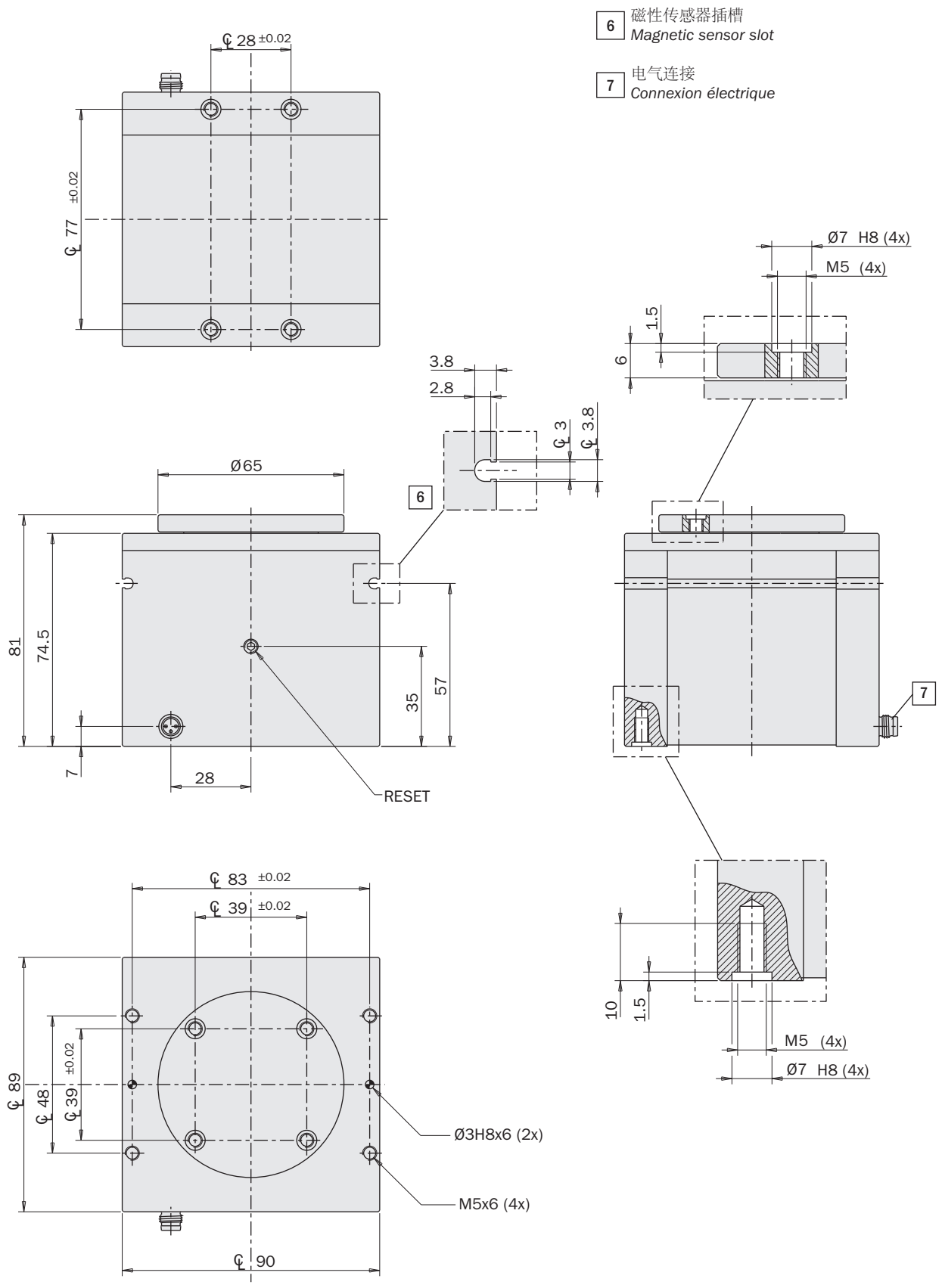

FIRST ANGLE PROJECTION

电气连接

该分度工作台配有一个用于 24 伏直流电源和旋转信号的 3 极 M8 连接器。

不需要其它电子部件驱动执行器。

Electrical connection

The indexing table is equipped with a 3-pole M8 connector for the 24Vdc power supply and the swiveling signal.

No further electronics is necessary to drive the actuator.

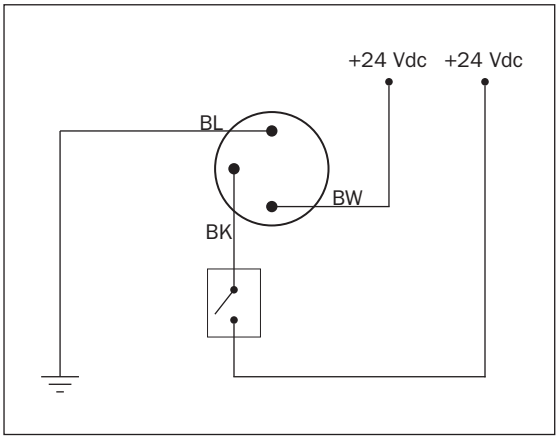

可选 M8x1 标准阴性连接器。
Gimatic 代码: CFGM800325P / CFGM890325P。

Optional M8x1 standard female connector.
Gimatic code: CFGM800325P / CFGM890325P.

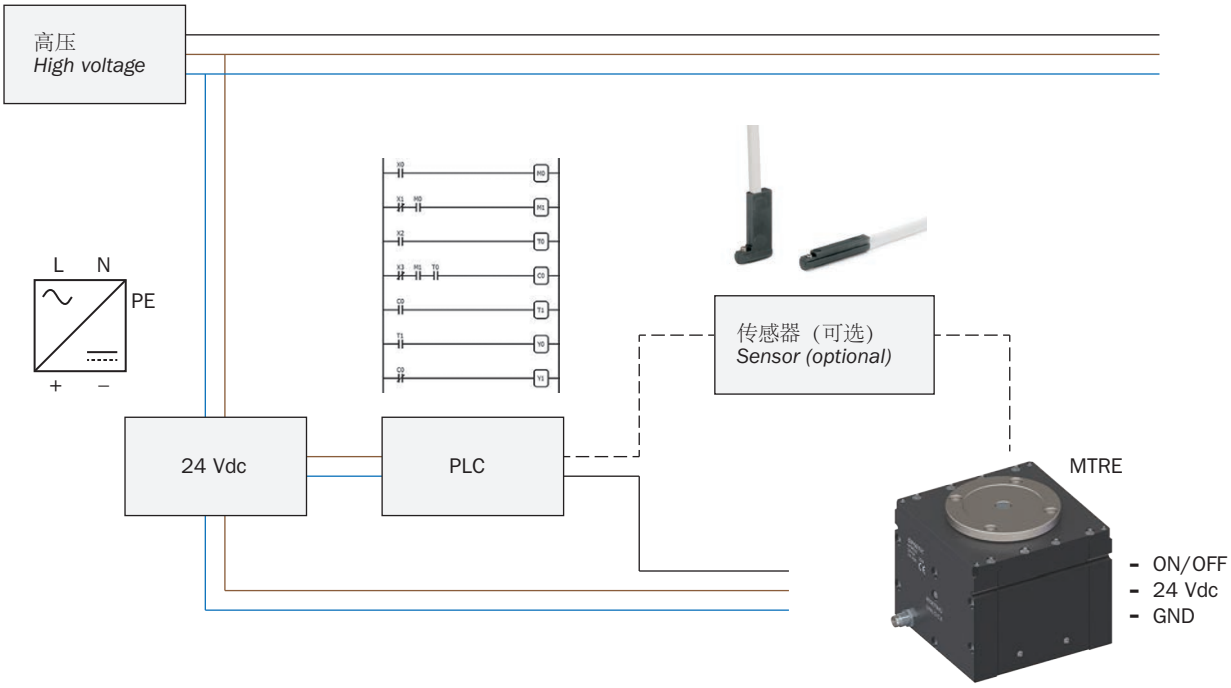

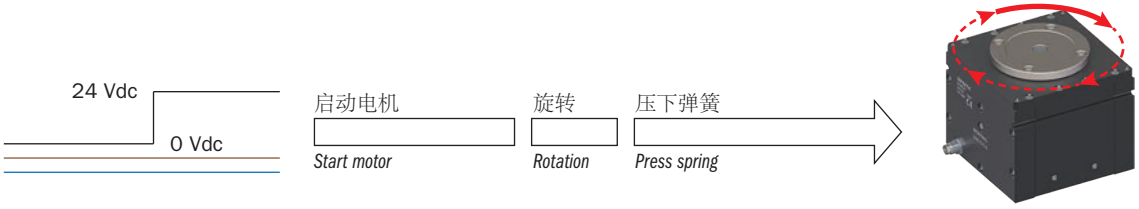

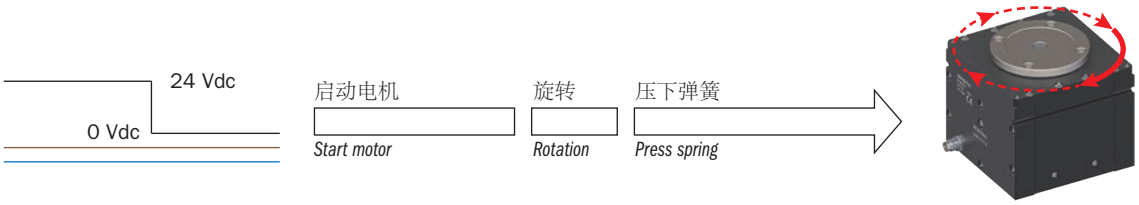

传感器

采用一个或多个接近磁性传感器（可选）检测运行位置，通过位于内板上的磁体检测位置。
因此，接近较大质量的铁磁材料或密集磁场会引起感应问题。
如有需要，可以使用高灵敏度度传感器（带有 HS 后缀）。

Sensors

The operating position is detected by one or more proximity magnetic sensors (optional), which detect the position by means of magnets located on the internal plate.
Therefore a near big mass of ferromagnetic material or intense magnetic fields may cause sensing troubles.
High-sensitivity sensors (HS suffix) can be used, if necessary.

标准传感器是：

Standard sensors are:

SN4N225-G	PNP	2.5 米线缆 / *2.5m Cable*
SN4M225-G	NPN	2.5 米线缆 / *2.5m Cable*
SN3N203-G	PNP	连接器 M8 / *Snap M8 plug connector*
SN3M203-G	NPN	连接器 M8 / *Snap M8 plug connector*
SS4N225-G	PNP	2.5 米线缆 / *2.5m Cable*
SS4M225-G	NPN	2.5 米线缆 / *2.5m Cable*
SS3N203-G	PNP	连接器 M8 / *Snap M8 plug connector*
SS3M203-G	NPN	连接器 M8 / *Snap M8 plug connector*

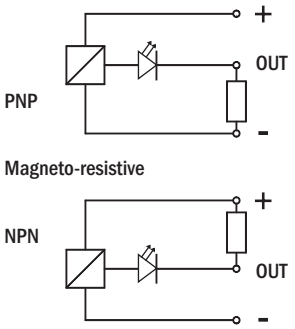

它们均提供了 3 线扁平线缆和一个 LED 灯。

They are all provided with a 3-wire flat cable and a LED.

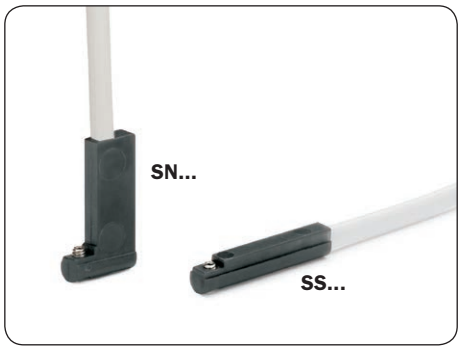

紧固分度工作台

分度工作台可以紧固到静态或移动部件上。位于移动部件上时，必须注意承受工作台及其负载的惯性力。
要将分度工作台紧固到底座上，使用包装内提供的四个螺丝 (SA) 和两个衬套 (BA)。
要从顶部紧固工作台，使用四个螺丝 (SB) 和两个销钉 (BB)。

Fastening of the indexing table

The indexing table can be fastened to a static or a moving part. When on a moving part, attention must be paid to the inertial force which the table and its load are subjected to.
To fasten the indexing table to the base, use the four screws (SA) and the two sleeves (BA) which are supplied in the package.
To fasten the table from the top, use four screws (SB) and two dowel pins (BB).

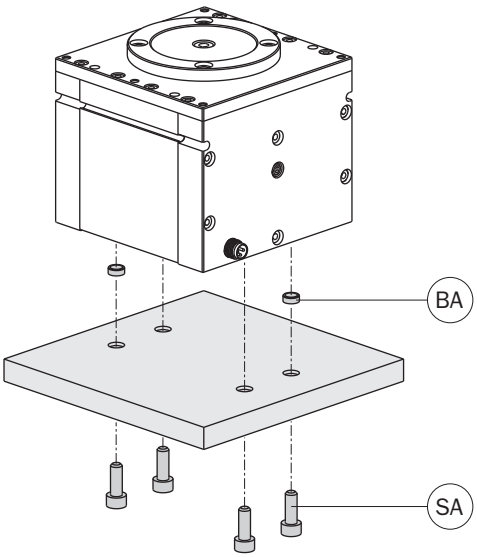

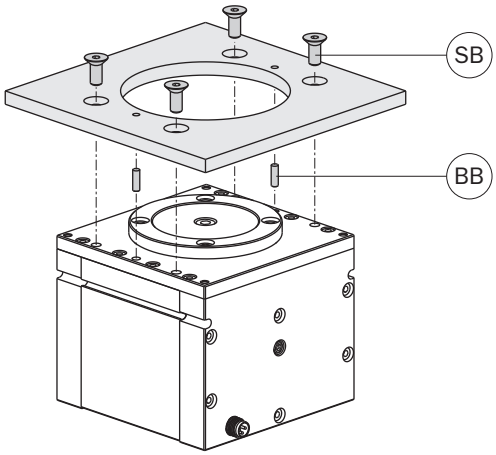

紧固旋转负载

用包装内提供的四个螺丝和对中衬套将负载紧固到板上。

负载的惯性力矩必须低于 240 千克 · 厘米²。
动能过大会损坏工作台和影响运行。

Fastening of the rotating load

Fasten the load onto the plate by using the four screws and the centring sleeves supplied in the package.

The moment of inertia of the load must be lower than 240 kgcm². Excessive kinetic energy can damage the table and compromise its operation.

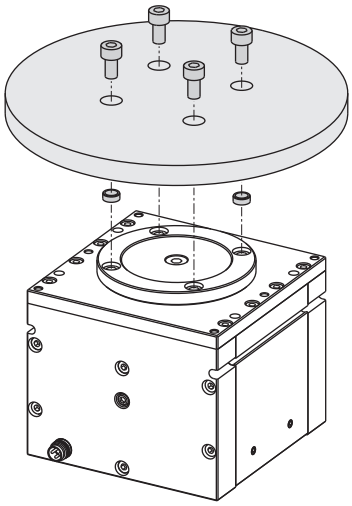

Jmax	240 kgcm²

安全负载

检查工作台的最大允许负载。
负载过大会损坏工作台和影响运行。

Safety loads

Check the table for maximum permitted loads.
Excessive loads can damage the table and compromise its operation.

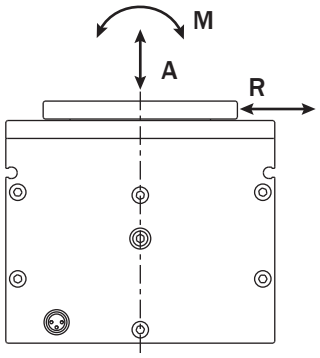

A	230 N
R	270 N
M	19 Nm

注意

请勿让设备接触腐蚀性物质、焊接飞溅物或研磨性粉末，因为会损坏设备。
请勿让人员或物体停留在设备的运行范围内。
如果将其安装在上面的机器不符合您所在国家的安全法律和标准，请勿运行设备。

Cautions

Never let the unit come into contact with corrosive substances, soldering splashes or abrasive powders as they may damage the unit.
Never let personnel or objects stand within the operating range of the unit.
Never operate the unit if the machine on which it is fitted does not comply with safety laws and standards of your country.

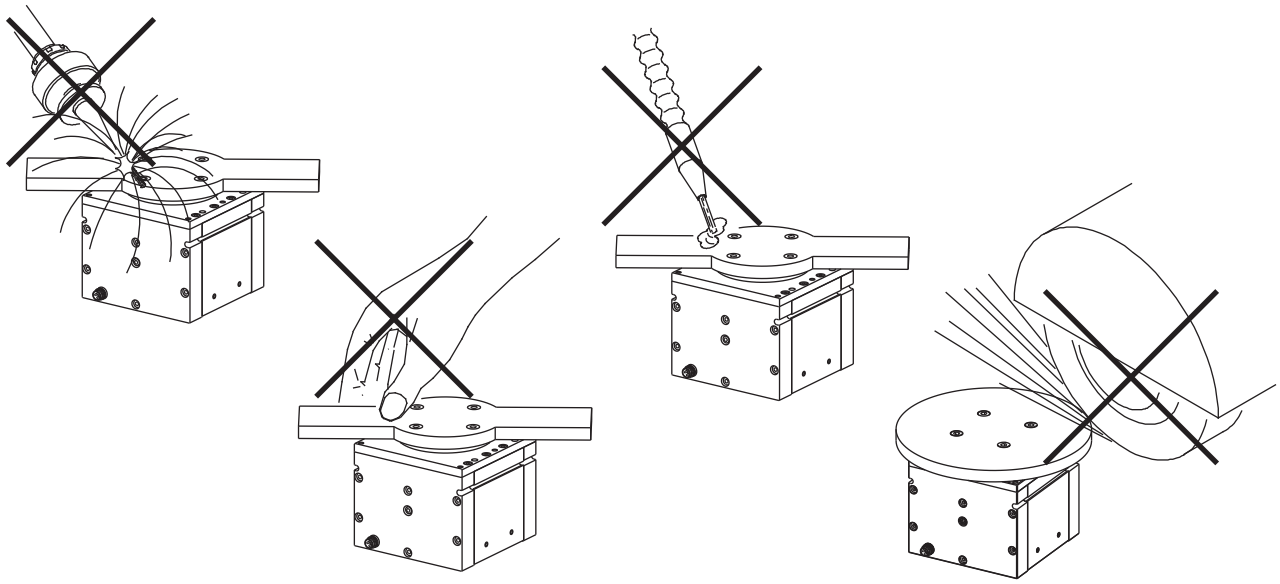

电动快速更换器

EQC75 提供电动快速更换器用于需要自动更改抓持部件的应用。
该系统包含一个主动部件 (EQC75-A) 和一块被动机械工具板 (EQC75-B)。
主动部件通常连接到机器人的腕上，一个或多个法兰连接到可互换抓持部件上。

- 全自动版本。
- 即插即用系统。
- M12x1，8 极主电源连接。
- 重量轻。
- 24 伏直流低压电源。
- 提供最多 4 个用户气动连接。
- 通过 15 针 D-SUB 附件进行最多 2 个用户电气连接。

Electric quick changer

The EQC75 electric quick changer is available for applications that need automatic change of the gripping element.
This system consists of an active part (EQC75-A) and a passive mechanical tool plate (EQC75-B).
The active part is usually connected to a robot's wrist while one or more flanges are connected to the interchangeable gripping elements.

- *Fully automatic version.*
- *Plug & Play system.*
- *M12x1, 8 poles main power connection.*
- *Lightweight.*
- *24 Vdc low voltage supply.*
- *Up to 4 user pneumatic connections available.*
- *Up to 2 user electrical connections by means of 15 pins D-SUB accessories.*

B 侧电气连接配置 (MAQC/MBQC)

B 侧气动连接配置（接头）

CONFIGURATION FOR ELECTRICAL CONNECTION OF SIDE B (MAQC/MBQC)

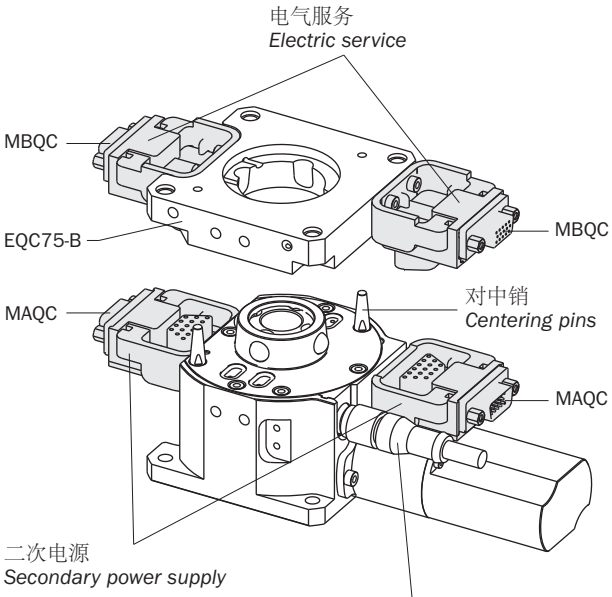

CONFIGURATION FOR PNEUMATIC CONNECTION OF SIDE B (FITTINGS)

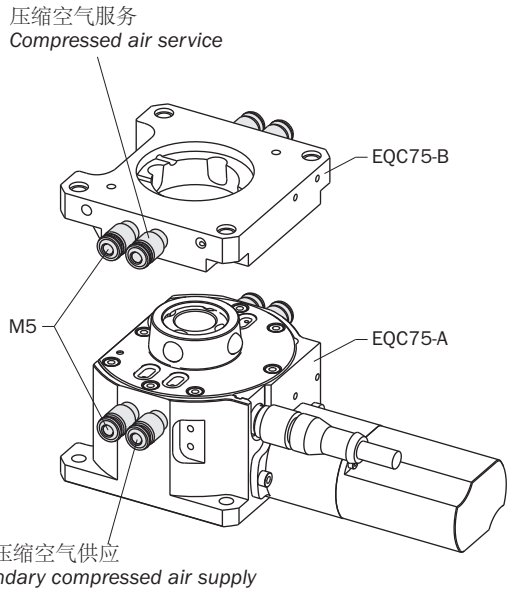

从电源至 EQC75 用于命令信号和状态数字输入和输出的 8 极 M12 连接器
8-pole M12 connector for power supply to the EQC75 for the command signal and for status digital inputs and outputs

	EQC75	
主体材料 *Body material*	铝合金 *Aluminium alloy*	
锁定/解锁系统材料 *Lock / unlock system material*	不锈钢 *Stainless steel*	
整体尺寸（偶合时） *Overall dimensions (when coupled)*	75 x 146 x 63.5 mm	
主板 (EQC75-A) 质量 *Mass of the master plate (EQC75-A)*	1000 g	
工具板 (EQC75-B) 质量 *Weight of the tool plate (EQC75-B)*	160 g	
锁定/解锁机制类型 *Lock / Unlock mechanism type*	球 *Balls*	
偶合/退偶时间 *Coupling / uncoupling time*	≤0.5 s	
最大偶合距离 *Maximum coupling distance*	1 mm	
走偏 *Skew*	±3°	
防护等级 *Protection rating*	IP40	
负载能力 *Load capacity*	10 kg	
最大轴向保持力（偶合） *Maximum axial holding force (coupled)*	2000 N	
最大扭转保持扭矩 *Maximum torsional holding torque*	150 Nm	
允许温度范围 *Allowed temperature range*	5÷60 °C	
电气连接 *Electrical connection*	M12，8 极 *M12, 8-pole*	
电源 *Power supply*	24 Vdc ± 10%, 0.5 Arms, 3.5 Apk	
PNP 数字输入 *PNP digital inputs*	低：偶合命令 *Low: coupling command*	高：退偶命令 *High: uncoupling command*
PNP 数字输出（每个最高 100毫安） *PNP digital outputs (max. 100 mA each)*	退偶（打开） *Uncoupled (open)*	偶合（关闭） *Coupled (closed)*
输出初始化延迟 *Output initialisation delay*	200 ms	

主要电气连接

该电动快速更换器配有一个 8 极 M12 阳性连接器，为识别偶合和退偶系统状态的锁定/解锁命令以及数字输出连接提供 24 伏直流电源。
无需使用额外外部电子控制系统。

Main electrical connection

The electric quick changer is equipped with an 8-pole M12 male connector that provides a 24 VDC power supply for the locking/ unlocking command and for the connection of the digital outputs that identify the coupled and uncoupled system status.
No additional external electronic control system is required.

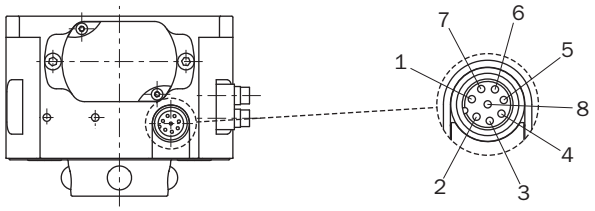

1	N/C -
2	24 Vdc
3	IN OPEN / CLOSED (PNP)
4	OUT OPEN (PNP)
5	5 OUT CLOSED (PNP)
6	N/C -
7	GND
8	N/C -

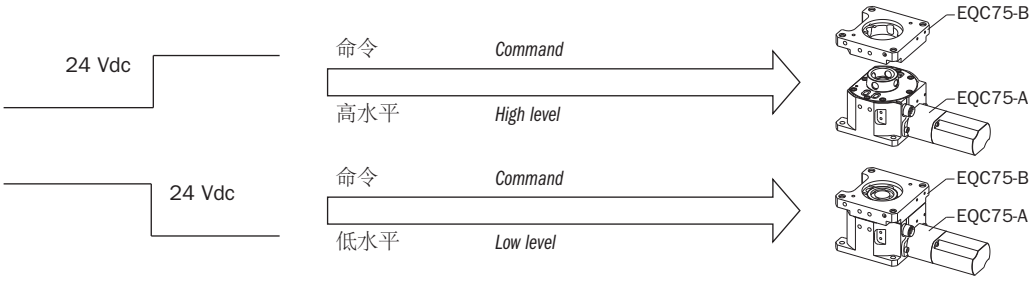

尺寸（毫米）
Dimensions (mm)

EQC75-A

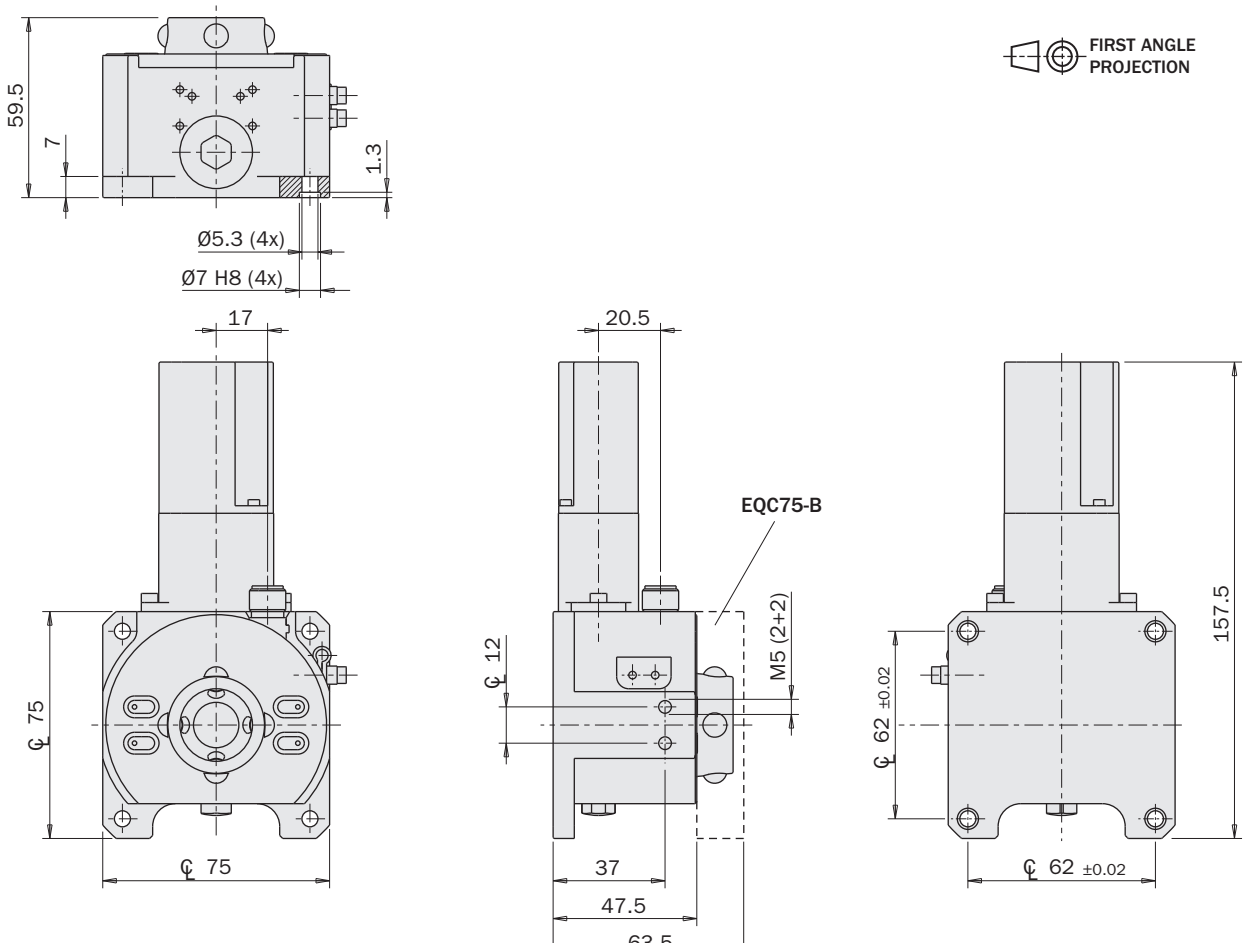

EQC75-B

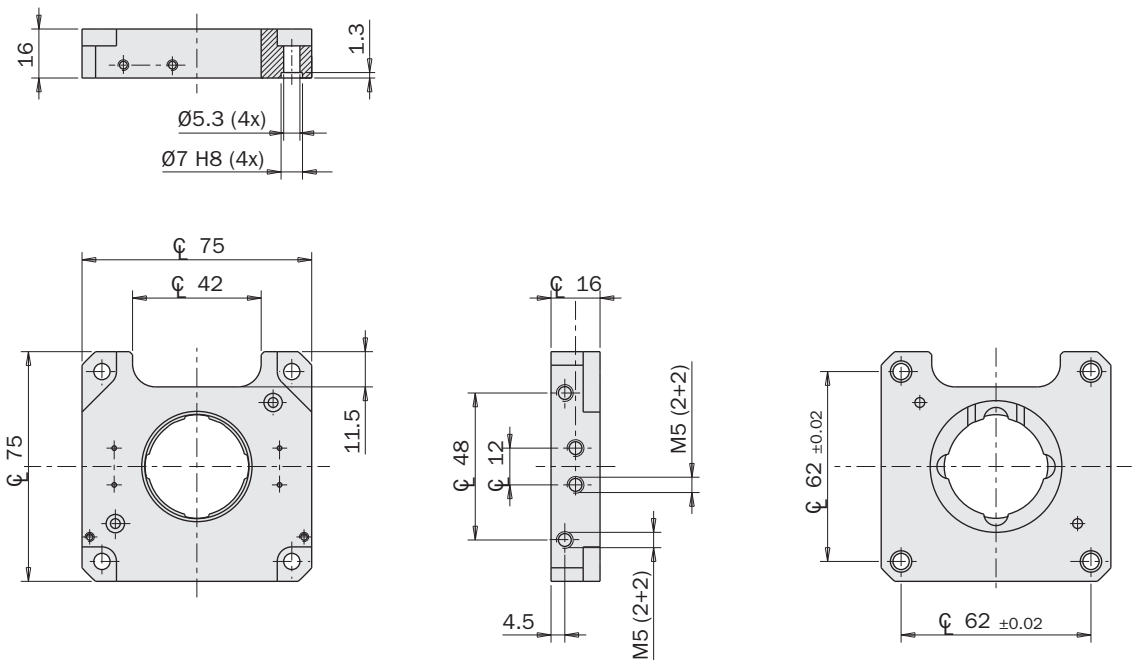

09/2016

电感式传感器（可选）

用支撑件 SJJ-A01 固定的 Ø4 电感式传感器（可选）可以检测偶合距离内存在 EQC75-B。

可以使用的传感器：

Inductive sensors (optional)

The presence of the EQC75-B within coupling distance can be detected by a Ø4 inductive sensor (optional) that is fixed using support SJJ-A01.

The sensors that can be used are:

SI4M225-G	NPN	电缆 2.5m / ***2.5m cable***
SI4N225-G	PNP	電纜 2.5m / ***2.5 m cable***

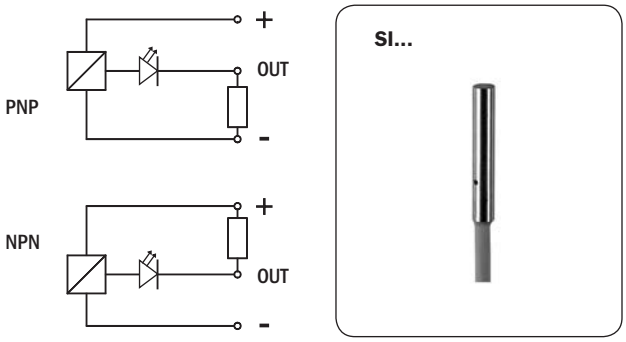

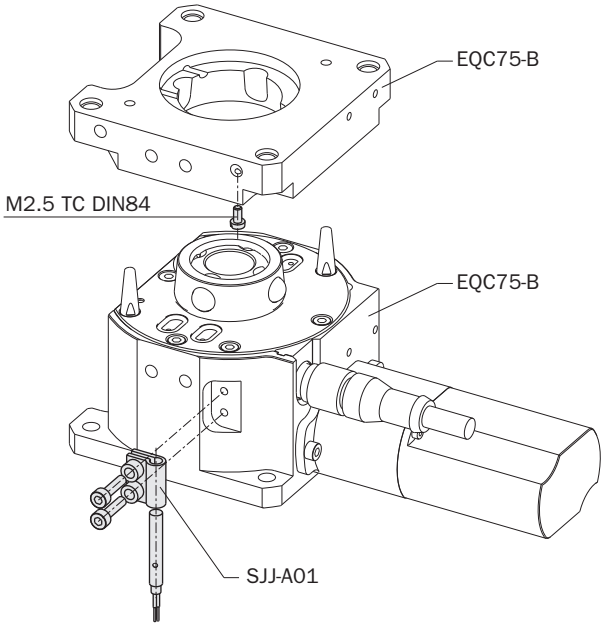

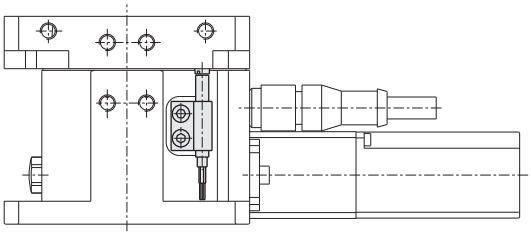

安全负载

检查工作台的最大允许负载。
力度或扭矩过大会损坏系统，引起运行问题以及危及操作人员的安全。
F 和 M 是静态条件下允许的最大负载。

Safety loads

Check the table for the maximum loads allowed.
Excessive forces or torques can damage the system, cause operation problems and endanger the safety of the operator.
F and M are the maximum loads allowed under static conditions.

		EQC75-A
最大力矩 ***Maximum moment***	Mt	150 Nm
最大力矩 ***Maximum moment***	Mb	100 Nm
最大力 ***Maximum force***	F	2000 N

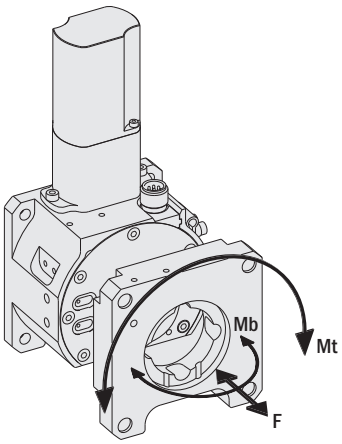

紧固

只能使用四个螺丝将快速更换器的主动部件紧固到底部。
可以用相似方式将工具板 B 紧固到负载上。
为了正确对中部件 A 和部件 B，使用包装内提供的两个衬套 (BA)。

Fastening

The active part of the quick changer can only be fastened on the bottom using four screws.
The tool plate, B, can be fastened on the load in a similar manner.
For proper centering of parts A and B, use the two bushes (BA) supplied in the package.

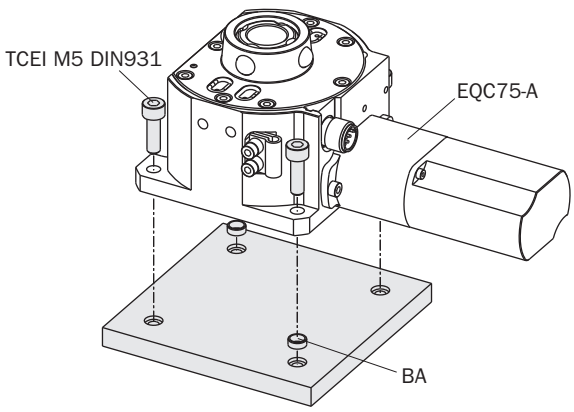

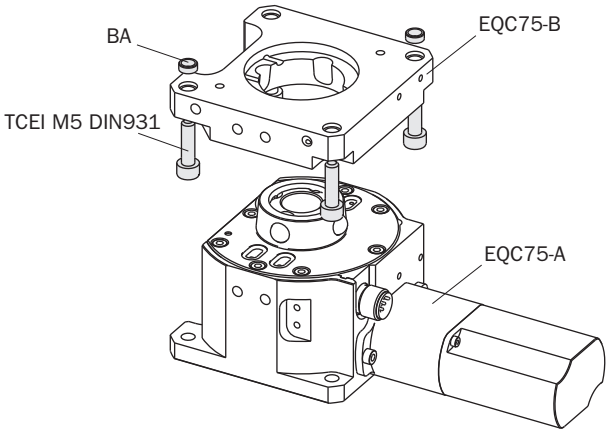

接口工具板 EQC75-K1（可选）

提供该 ISO 9409-1 兼容可选紧固工具板，以将 EQC75-A 连接到机器人腕上。
可以用四个螺丝和包装内提供的两个对中衬套 (BA) 紧固。

Interface tool plate EQC75-K1 (optional)

This ISO 9409-1-compliant optional fastening tool plate is available to enable the EQC75-A to be connected to a robot wrist. It can be fastened with four screws using the two centering bushes (BA) supplied in the package.

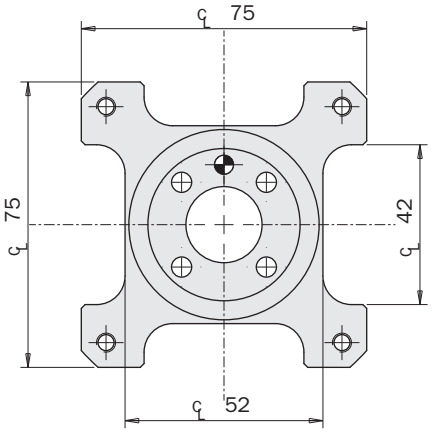

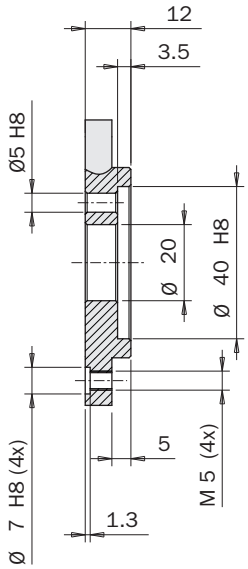

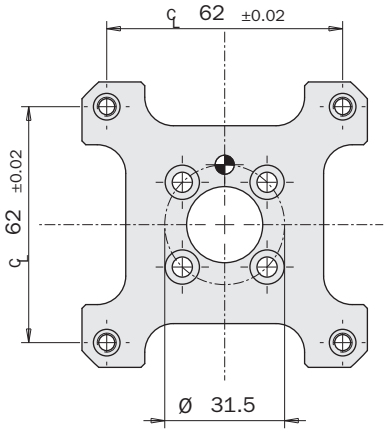

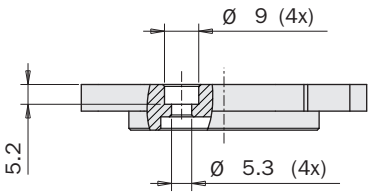

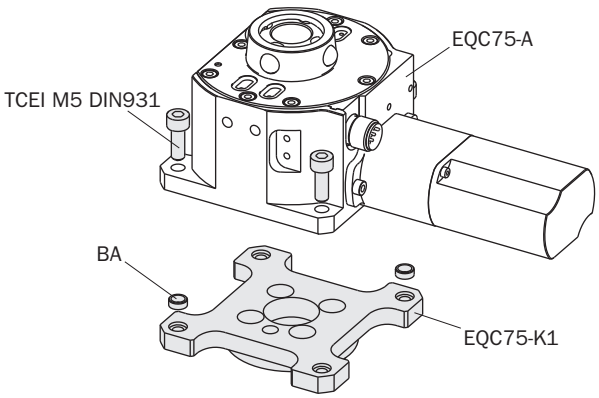

MAQC/MBQC（可选）

为了允许部件 A 和部件 B 之间的二次电气连接，分别提供附件 MAQC 和 MBQC（单独提供两个部件）。
连接器的主要特征：
- 15 个电气连接
- 带有自清洁头的触针
- 使用 VGA 连接器（可选）的输入/输出快速连接

MAQC / MBQC (optional)

To permit a secondary electric connection between parts A and B, the accessories MAQC and MBQC are available respectively (the two parts are supplied separately).
Main characteristics of the connectors:
- *15 electrical connections*
- *feeler pin with self-cleaning heads*
- *I/O quick connection using VGA connector (optional)*

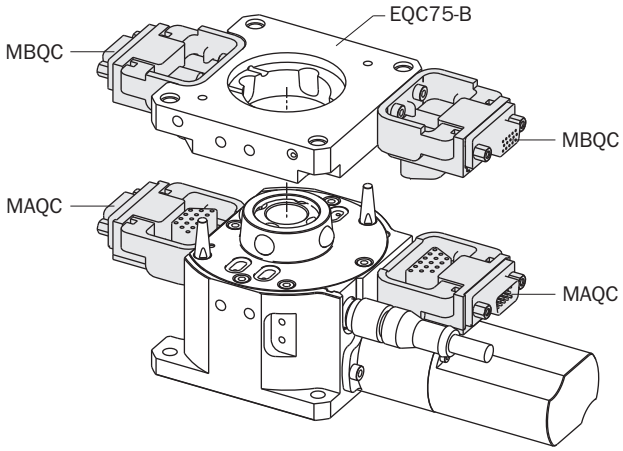

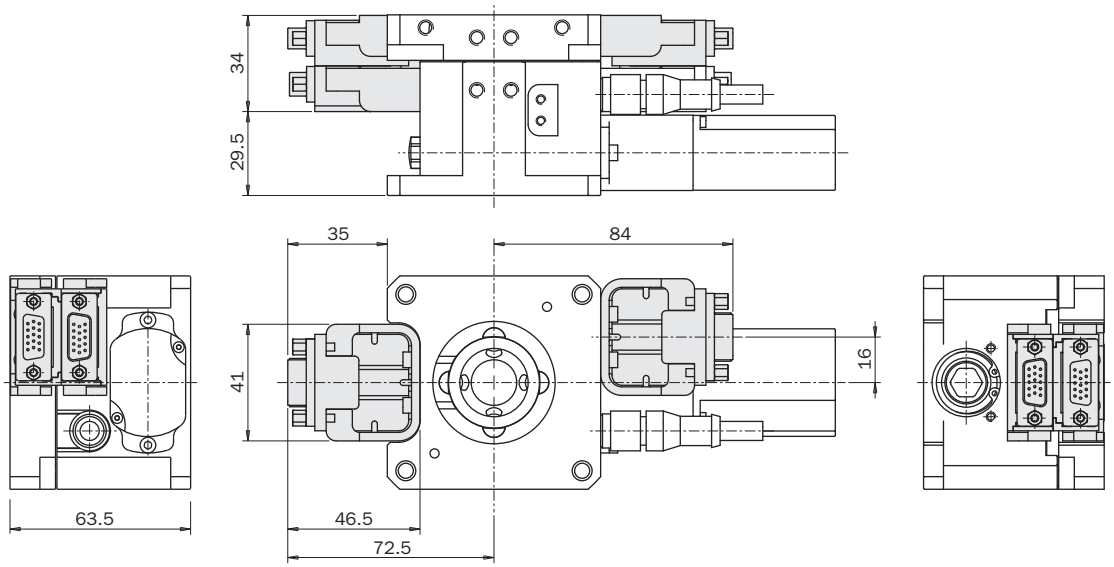

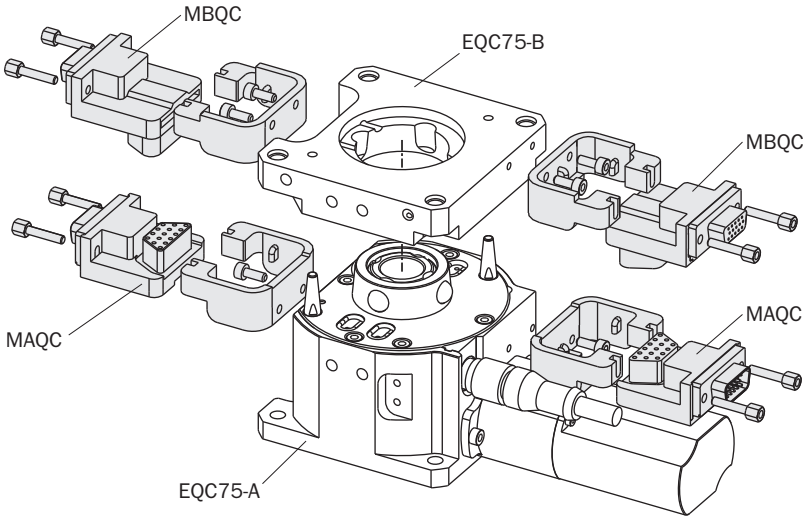

CEQC-A、CEQC-B（可选）

单独提供二次电气连接要求的阳性和阴性线缆。

CEQC-A, CEQC-B (optional)

The male and female cables required for the secondary electrical connection are supplied separately.

CEQC-A

CEQC-B

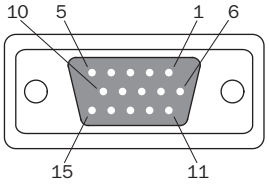

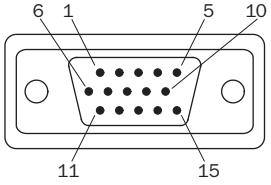

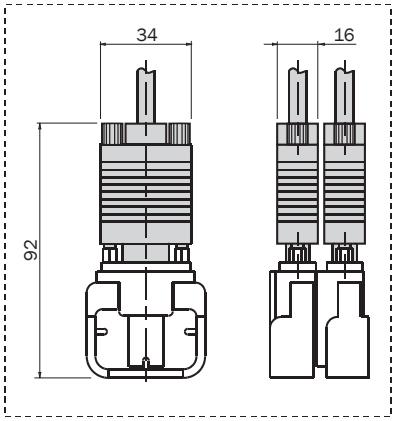

01	橙色 *Orange*
02	黄色 *Yellow*
03	深绿色 *Deep Green*
04	蓝色 Blue
05	浅绿色 *Light Green*
06	棕色 *Brown*
07	棕色/白色 *Brown / White*
08	红色 *Red*

09	红色/白色 *Red / White*
10	粉红 *Pink*
11	紫色 *Violet*
12	灰色 *Gray*
13	白色 *White*
14	黑色 *Black*
15	黑色/白色 *Black / White*

	CEQC-A	CEQC-B
输入/输出连接类型 *I/O connection type*	15 针 D-SUB – VGA 型 *15-pin D-SUB - VGA type*	
线缆长度 *Cable length*	1500 mm	
绝缘体 *Insulation*	PVC	
屏蔽 *Shield*	100% 铝 -聚酯薄膜 – 28 至 26 AWG *100% aluminum - Mylar foil - 28 to 26 AWG*	
护套 *Sheath*	黑色 PVC *Black PVC*	
温度范围 *Temperature range*	-55°C ÷ +105°C	
电压范围 *Voltage range*	0 ÷ 300 V	

CEQC-AC、CEQC-BC（可选）

单独提供阳性和阴性焊接连接器。

CEQC-AC, CEQC-BC (optional)

The male and female solder connectors are supplied separately.

CEQC-AC

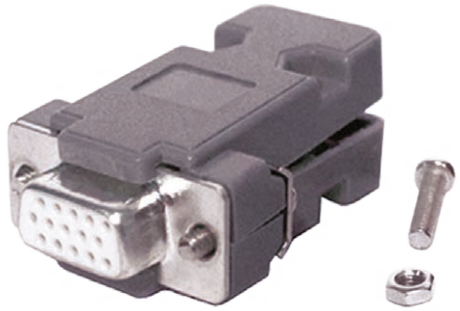

CEQC-BC

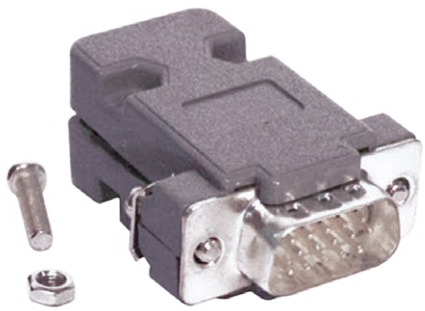

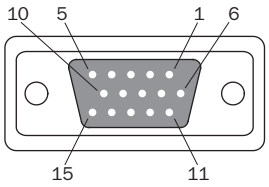

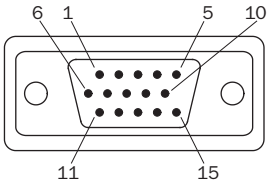

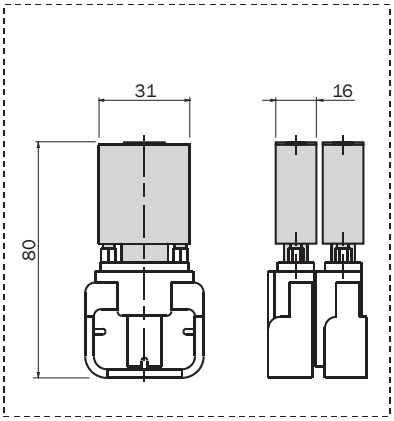

	CEQC-AC	CEQC-BC
输入/输出连接类型 *I/O connection type*	15 针 D-SUB – VGA 型 *15-pin D-SUB - VGA type*	
接触器 *Contacts*	铜 *Copper*	
绝缘体 *Insulation*	聚酯 *Polyester*	
温度范围 *Temperature range*	-20°C ÷ +80°C	
电压范围 *Voltage range*	0 ÷ 300 V	
最高电流 *Max current*	3A	

EQC75-K2（可选）

单独提供不用时储存工具板所需要的 4 个销。

EQC75-K2 (optional)

4 pins required for storage of the tool plate when not in use are supplied separately.

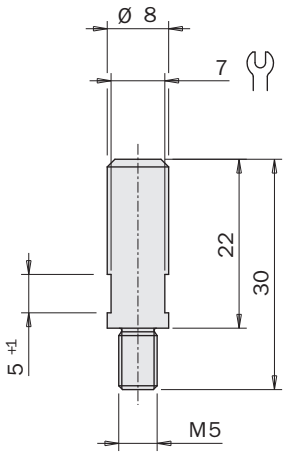

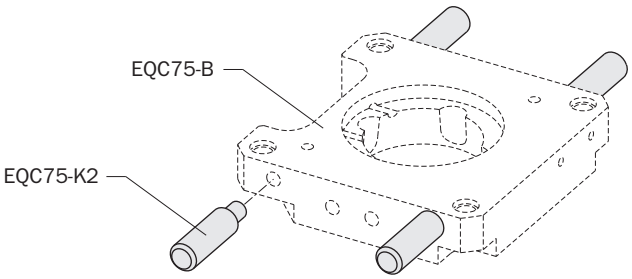

支撑件示例

Example of support

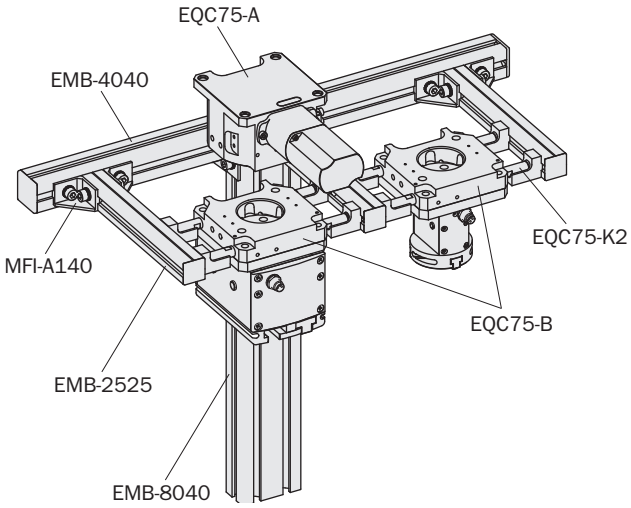

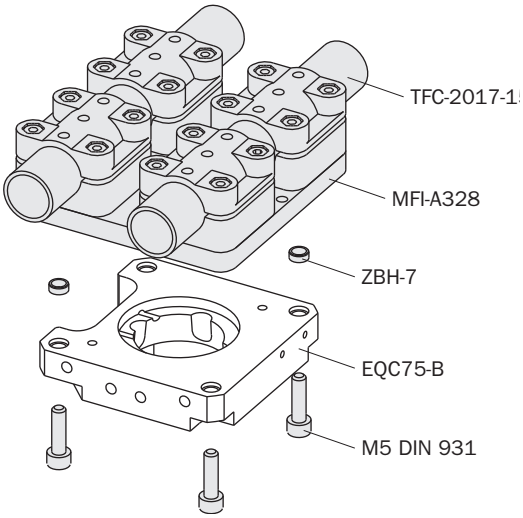

维护

为使设备正常运行，我们建议使用普通棉棒定期清洁球座。

Maintenance

For correct operation of the device, we recommend periodic cleaning of the ball seats using a common cotton swab.

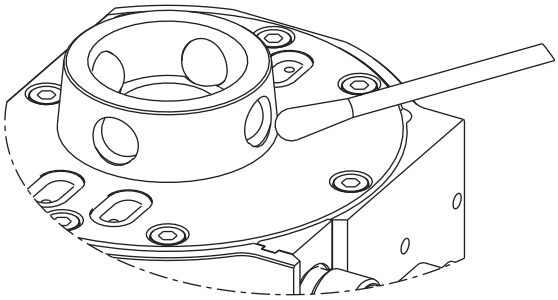

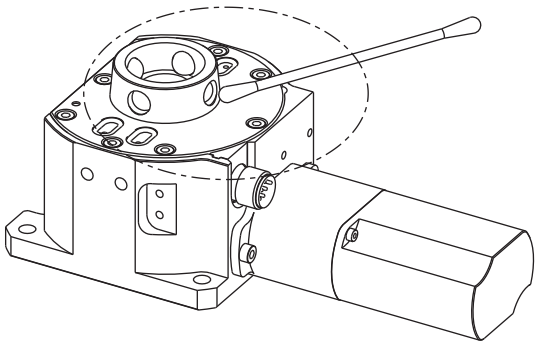

注释
Notes

线性电机 - 主要特点

旋转电机和线性电机之间的主要差异是线性电机产生力，旋转电机产生扭矩。
其运行与其起源的旋转电机相同。
在需要直接驱动线性移动的自动移动中使用此类执行器十分方便，消除了移动转化部件，例如皮带、嵌齿或导向丝杆。
它们通常被称为“直接驱动”的原因是：它们直接连接负载。
由于没有转化部件，移动更好、更准确，因为具有刚性、惯性质量更低、没有反冲以及系统弹性。
线性电机的主要部件是：定子（初级），在此将线圈和温度传感器置于外罩内；以及滑轨（次级），永磁位于该处。
用于机器人应用的一个配有 M12 连接器的可移动编码器组成该系统。使用一根挤出杆散热以及便于固定，由于采用 T 型槽孔和 ISO 尺寸气缸。

Linear motors - Main features

The main difference between rotary and linear motors is that linear produce a force and rotary produce a torque.
Their operation is identical to that of rotary motors from which they are derived.
Use of this type of actuator is very convenient in automatic motion where it is necessary to drive the linear motion directly eliminating the motion conversion parts such as the belts, cogs, or lead-screws.
This is why they are commonly called “direct drive:” they are directly linked to the load.
Without the conversion parts, motion is better and more accurate thanks to the stiffness, lower inertial mass, no backlash and the elasticity of the system.
The main parts of a linear motor are the stator (primary) where the coils and temperature sensor are housed, and the slider (secondary) where the permanent magnets are located.
A removable encoder with M12 connectors for robotic applications completes the system. An extruded bar is used for heat dissipation as well as to facilitate fixing thanks to the T-groves and the ISO dimensioned cylinders.

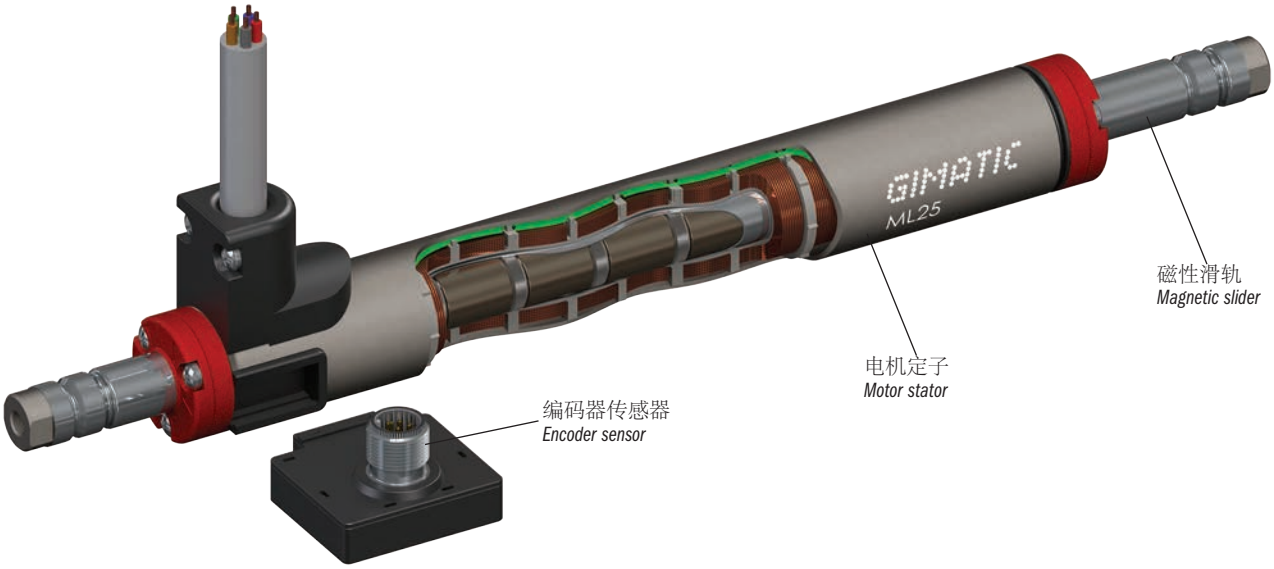

应用示例

Application example

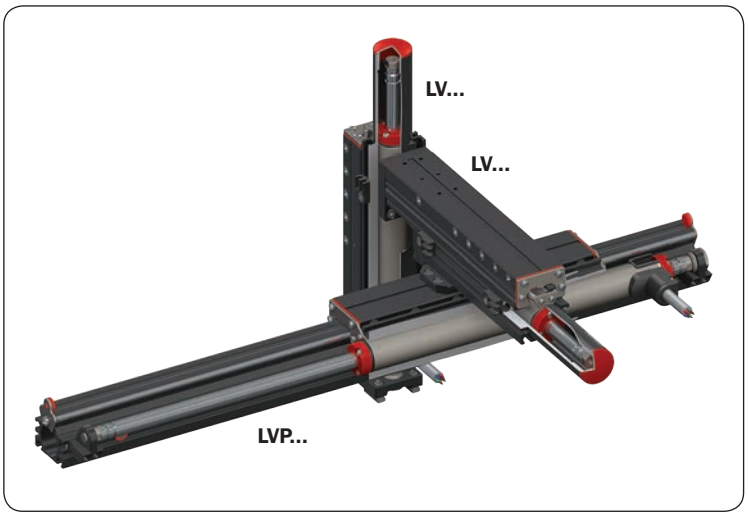

线性电机 - 技术

圆柱形线性电机的工作原理与标准同步无电刷电机相同。
依据应用，线圈位于其内的定子可以保持静止并移动滑轨和内部的磁体，反之，可以固定滑轨，但定子移动。
磁体以北南顺序定位，以允许位于定子上的测量系统确认往复位置。
使用传统无电刷电机的普通驱动器可以控制这些电机。这些逆变器控制初级的电流，以使用磁极获取 90° 电气偏移，从而使推力达到最大。
磁体的变化极性产生称为阻塞的力，可以用集成于驱动器内的特殊功能（前向馈送）方便地消除该力。

Linear motors - Technology

The working principle of the cylindrical linear motor is the same as that of a standard synchronous brushless motor.
Based on the application, the stator, where the coils are located, can remain still and move the slider with magnets inside, or vice versa, the slider can be fixed and the stator move.
Magnets are positioned in a North-South sequence in order permit the measurement system, located on the stator, to verify the reciprocal position.
These motors can be controlled using common drives for traditional brushless motors. These converters control the current to the primary in order to obtain a 90° electric offset with the magnetic poles, maximising the thrust.
The alternating polarity of the magnets produces a force called COGGING which can easily be eliminated by special functions (feed-forward) integrated in the drives.

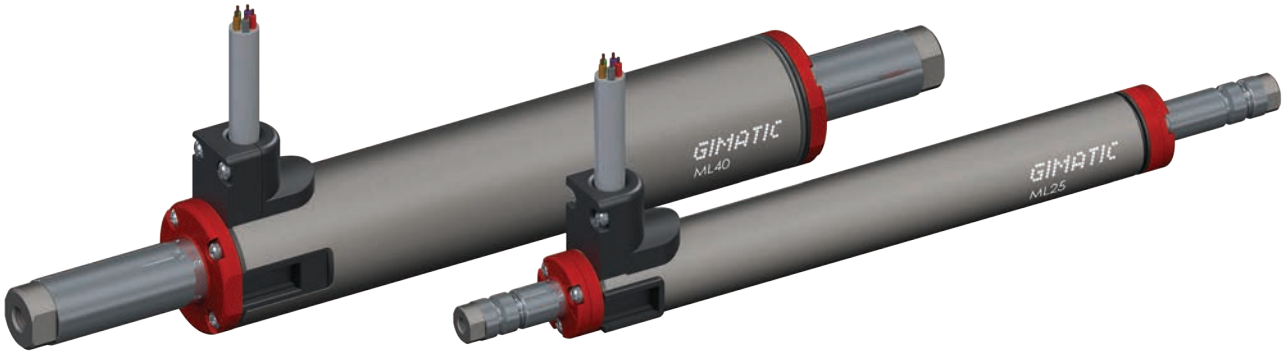

线性电机 - 优点

- 无齿轮箱。
- 无皮带和皮带轮。
- 无需定期润滑。
- 无需定期调整。
- 无旋转驱动轴。
- 无反冲。
- 无机械磨损。
- 直接推力电机。
- 机械组件简洁。
- 移动部件少。
- 无内部移动部件。
- 移动质量更小。
- 效率更高。
- 惯性更低。
- 更换方便。
- 基于需要的应用选择移动部件（定子或滑轨）。
- 加速度高。
- 高度。
- 质量低。
- 零轴向力矩。

Linear motors - Advantages

- *No gear box.*
- *No belt and pulley.*
- *No periodic lubrication.*
- *No periodic adjustments.*
- *No rotary drive shaft.*
- *No backlash.*
- *No mechanical wear.*
- *Direct thrust motor.*
- *Simple mechanical assembly.*
- *Few moving parts.*
- *No internal moving parts.*
- *Less mass to move.*
- *Greater efficiency.*
- *Lower inertia.*
- *Easy replacement.*
- *Moving part (stator or slider) selection based on the desired application.*
- *High acceleration.*
- *High speed.*
- *Low weight.*
- *Zero axial moment.*

Ø25 电机定子

- 3 相电机三角形连接。
- PTC 正温度系数分量。
- 挠性线缆输出。
- 高度滑动性杆清洁器。
- 运行温度： 25℃。
- 最高电机温度： 100° C。

Ø25 motor stator

- *3 phase motor delta connection.*
- *PTC positive temperature coefficient component.*
- *Flex cable output.*
- *High-slidability rod wiper.*
- *Operating temperature: 25°C.*
- *Maximum motor temperature: 100°C.*

3 相电机 - 主要数据
3-PHASE MOTOR - Main data

	ML2570X4	ML2570X6	ML25300X4	ML25300X6
电机长度 *Motor length*	200 mm	270 mm	200 mm	270 mm
三相线圈单元 *Three-phase coil units*	4	6	4	6
极距 *Pole pitch*	35.4 mm			
电机外径 *Motor external diameter*	Ø25 mm			
质量 *Mass*	273 g	384 g	273 g	384 g
总线电压 *BUS voltage*	72 Vdc	72 Vdc	325 Vdc	325 Vdc
峰值力 *Peak force*	98.1 N	105.4 N	117 N	131.6 N
峰值电流 (100° C) *Peak current (100°C)*	7.7 A	5.2 A	3.1 A	2.1 A
力常数 *Force constant*	12.7 N/A	20.3 N/A	34.4 N/A	62.7 N/A
连续力 *Continuous force*	17 N	27 N	12 N	22 N
连续电流 (100° C) *Continuous current (100°C)*	1.35 A	1.35 A	0.36 A	0.36 A
最高速度 *Maximum speed*	6 m/s	4 m/s	9 m/s	5.7 m/s
25° C/100° C 相阻 *Phase resistance at 25°C/100°C*	4.8/6.5 Ohm	7.1/9.6 Ohm	48.6/67.5 Ohm	77.5/105.1 Ohm
相位感应 *Phase inductance*	1.2 mH	1.9 mH	11.2 mH	20.5 mH
BEMF 常数 *BEMF constant*	11.6 Vs/m	18.2 Vs/m	36.3 Vs/m	57.7 Vs/m
热阻 *Thermal resistance*	5°C/W	3.45°C/W	5.75°C/W	4.35°C/W
最高相温度 *Max phase temperature*	100°C			
PTC 值 *PTC value*	1 kOhm @25°C			
PTC 最高电压 *PTC max voltage*	40 Vdc			
连接 *Connection*	线缆 *Cable*			
环境防护等级 *Environmental Degree*	IP67			
参考标准 *Reference standards*	EN 61000-6-2 + EC + IS1; EN 61000-6-4; EN 62233			

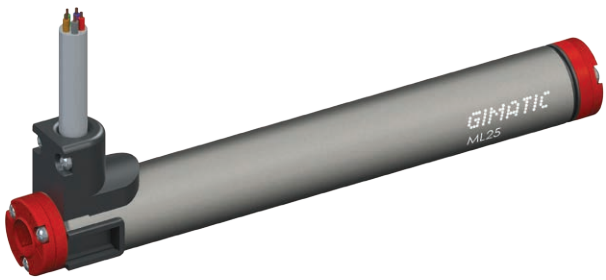

Ø40 电机定子

- 3 相电机三角形连接。
- PTC 正温度系数分量。
- 挠性线缆输出。
- 高度滑动性杆清洁器。
- 运行温度：25°C。
- 最高电机温度：100°C。

Ø40 motor stator

- *3 phase motor delta connection.*
- *PTC positive temperature coefficient component.*
- *Flex cable output.*
- *High-slidability rod wiper.*
- *Operating temperature: 25°C.*
- *Maximum motor temperature: 100°C.*

3 相电机 - 主要数据
3-PHASE MOTOR - Main data

	ML4070X4	ML4070X6	ML40300X4	ML40300X6
电机长度 *Motor length*	204 mm	275 mm	204 mm	275 mm
三相线圈单元 *Three-phase coil units*	4	6	4	6
极距 *Pole pitch*	35.4 mm			
电机外径 *Motor external diameter*	Ø40 mm			
质量 *Mass*	670 g	940 g	700 g	980 g
总线电压 *BUS voltage*	72 Vdc	72 Vdc	325 Vdc	325 Vdc
峰值力 *Peak force*	258 N	294 N	421 N	412 N
峰值电流 (100°C) *Peak current (100°C)*	19 A	14.2 A	8.8 A	5.8 A
力常数 *Force constant*	13.6 N/A	20.7 N/A	47.8 N/A	71.1 N/A
连续力 *Continuous force*	39 N	51 N	33 N	42 N
连续电流 (100°C) *Continuous current (100°C)*	2.9 A	2.5 A	0.7 A	0.6 A
最高速度 *Maximum speed*	5.25 m/s	4.0 m/s	7.0 m/s	5 m/s
25°C/100°C 相阻 *Phase resistance at 25°C/100°C*	1.8/2.4 Ohm	2.6/3.6 Ohm	19.1/26.2 Ohm	28.9/39.5 Ohm
相位感应 *Phase inductance*	0.7 mH	1.1 mH	9.08 mH	13.25 mH
BEMF 常数 *BEMF constant*	12 Vs/m	17.5 Vs/m	41 Vs/m	62 Vs/m
热阻 *Thermal resistance*	2.78°C/W	2.52°C/W	4.02°C/W	3.36°C/W
最高相温度 *Max phase temperature*	100°C			
PTC 值 *PTC value*	1 kOhm @25°C			
PTC 最高电压 *PTC max voltage*	40 Vdc			
连接 *Connection*	线缆 *Cable*			
环境防护等级 *Environmental Degree*	IP67			
参考标准 *Reference standards*	EN 61000-6-2 + EC + IS1; EN 61000-6-4; EN 62233			

ML25 运行区域

下列图形显示线性电机的运行区域，只是电机的所有可能运行点。
内部部分定义电机的连续运行区域，并显示使电机无限期运行的条件。
其余部分显示仅使电机短期运行的条件。
根据一般尺寸标准，负载的特征曲线应完全包括在间歇区域，运行点（均方根点）应位于连续区域内部。

ML25 operation fields

The following graphs show the operation fields of linear motors, that is all the possible operation points of the motor only.
The internal portion defines the motor's continuous operation area and shows the conditions that enable the motor to operate for an indefinite period of time.
The remaining portion shows the conditions that enable the motor to operate for short periods of time only.
According to the general sizing criteria, the load's characteristic curve should be entirely included in the intermittent area and the operation point (root mean square point) should be inside the continuous area.

间歇 *Intermittent*　　连续 *Continuous*

ML2570X4

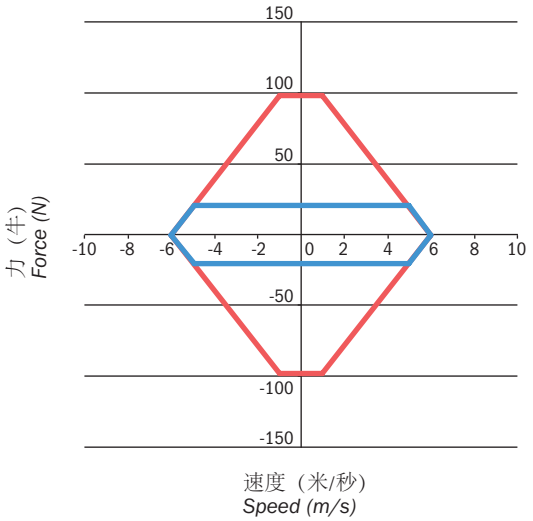

ML2570X6

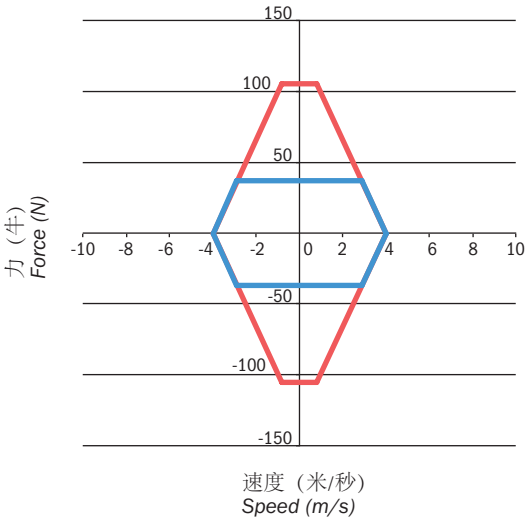

ML25300X4

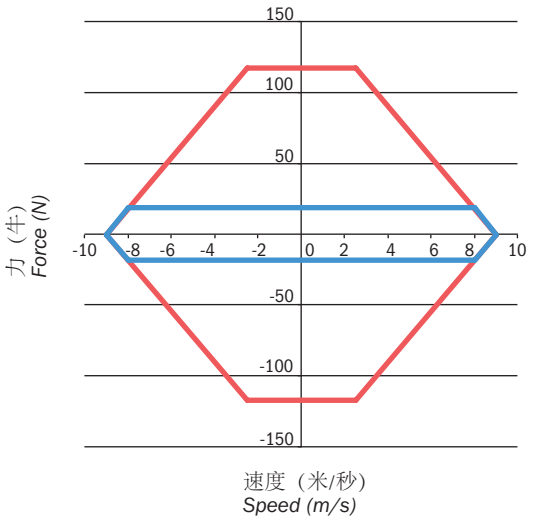

ML25300X6

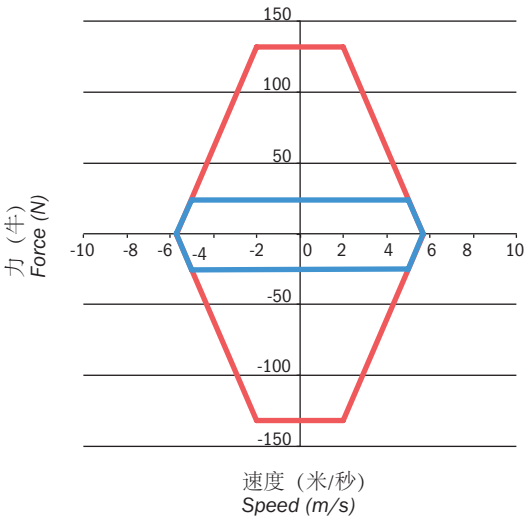

ML25 静态推力

线性电机可以发出的最大推力依赖于插入电机的滑轨部分。
下列图形显示电机在静态条件下可以发出的最大力度变化，以其组成的两个部件 Lm 和 Ls的长度为函数。
下表允许基于电机和滑轨的选择长度 (Ls) 正确缩放图形。

ML25 static thrusts

The maximum thrust that a linear motor can exert depends on the slider portion inserted in the motor.
The following graphs show the variation of the maximum force that can be exerted by the motor under static conditions and as a function of the length of the two elements it consists of, Lm and Ls.
The following table allows to correctly scale the graphs based on the motor and the slider's selected length (Ls).

	ML2570X4	ML2570X6	ML25300X4	ML25300X6
A [mm]	5			
B [mm]	18.5 + (Ls-Lm)			
ZP [mm]	0.5 x (A+B)			
C [mm]	101	154	103	157

ZP 零点 *Zero point*

Ls 滑轨长度 *Slider length*

Lm 电机长度 *Motor length*

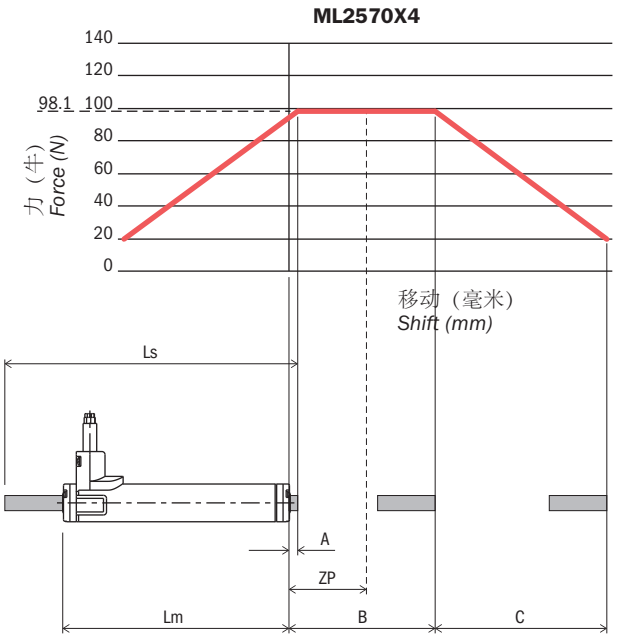

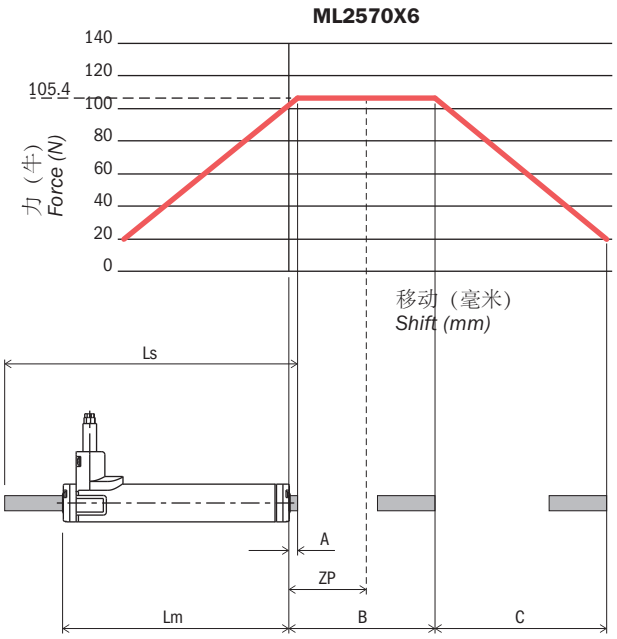

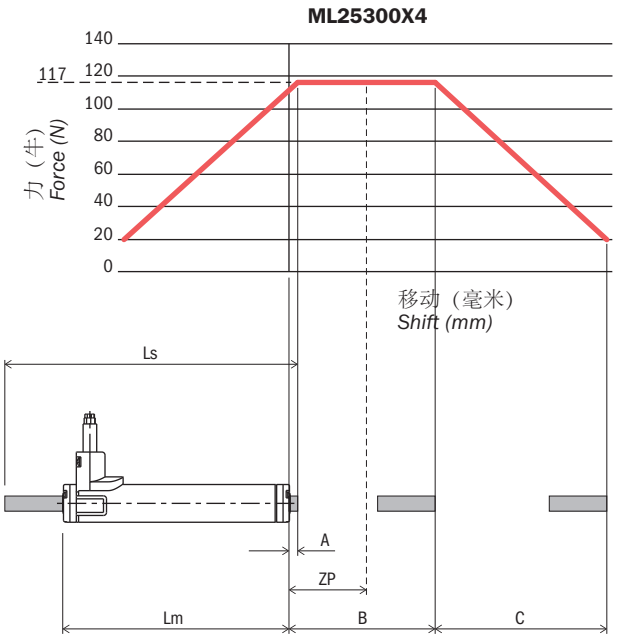

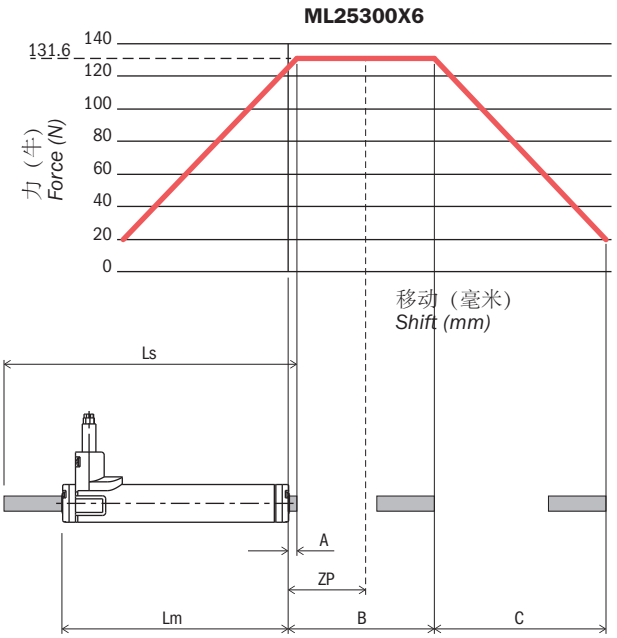

ML40 运行区域

下列图形显示线性电机的运行区域，只是电机的所有可能运行点。
内部部分定义电机的连续运行区域，并显示使电机无限期运行的条件。
其余部分显示仅使电机短期运行的条件。
根据一般尺寸标准，负载的特征曲线应完全包括在间歇区域，运行点（均方根点）应位于连续区域内部。

ML40 operation fields

The following graphs show the operation fields of linear motors, that is all the possible operation points of the motor only.
The internal portion defines the motor's continuous operation area and shows the conditions that enable the motor to operate for an indefinite period of time.
The remaining portion shows the conditions that enable the motor to operate for short periods of time only.
According to the general sizing criteria, the load's characteristic curve should be entirely included in the intermittent area and the operation point (root mean square point) should be inside the continuous area.

间歇 *Intermittent*　　连续 *Continuous*

ML4070X4

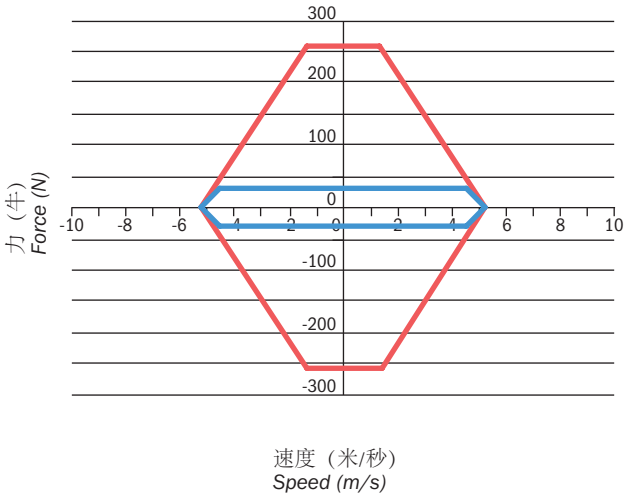

ML4070X6

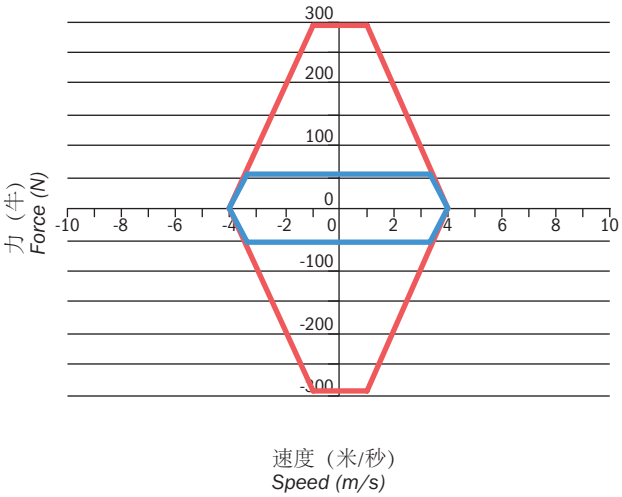

ML40300X4

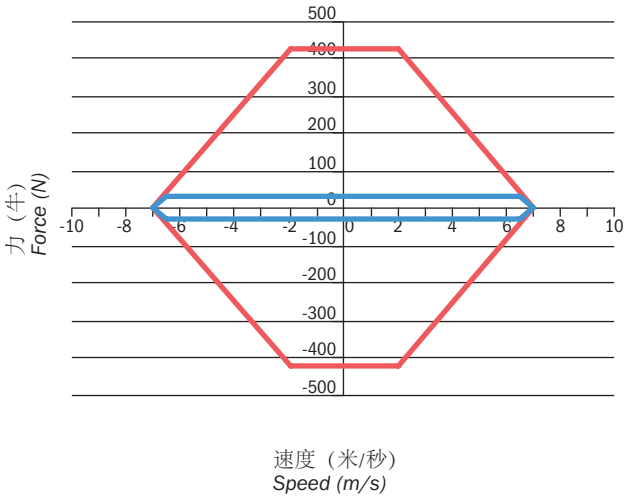

ML40300X6

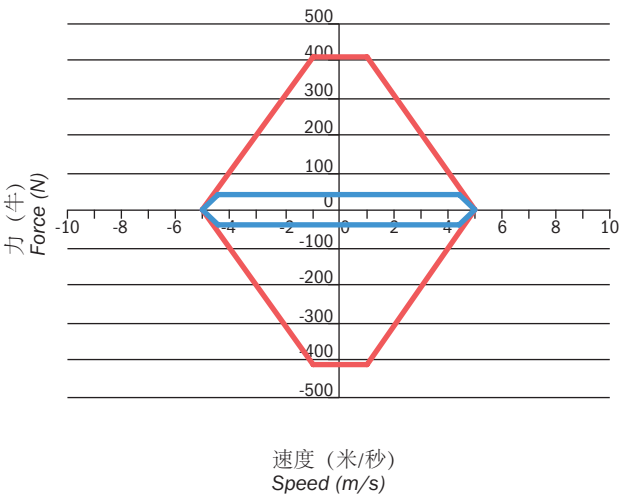

ML40 静态推力

线性电机可以发出的最大推力依赖于插入电机的滑轨部分。
下列图形显示电机在静态条件下可以发出的最大力度变化，以其组成的两个部件 Lm 和 Ls的长度为函数。
下表允许基于电机和滑轨的选择长度 (Ls) 正确缩放图形。

ML40 static thrusts

The maximum thrust that a linear motor can exert depends on the slider portion inserted in the motor.
The following graphs show the variation of the maximum force that can be exerted by the motor under static conditions and as a function of the length of the two elements it consists of, Lm and Ls.
The following table allows to correctly scale the graphs based on the motor and the slider's selected length (Ls).

	ML4070X4	ML4070X6	ML40300X4	ML40300X6
A [mm]	15			
B [mm]	10 + (Ls-Lm)			
ZP [mm]	0.5 x (A+B)			
C [mm]	252	369	255	373

ZP 零点 *Zero point*

Ls 滑轨长度 *Slider length*

Lm 电机长度 *Motor length*

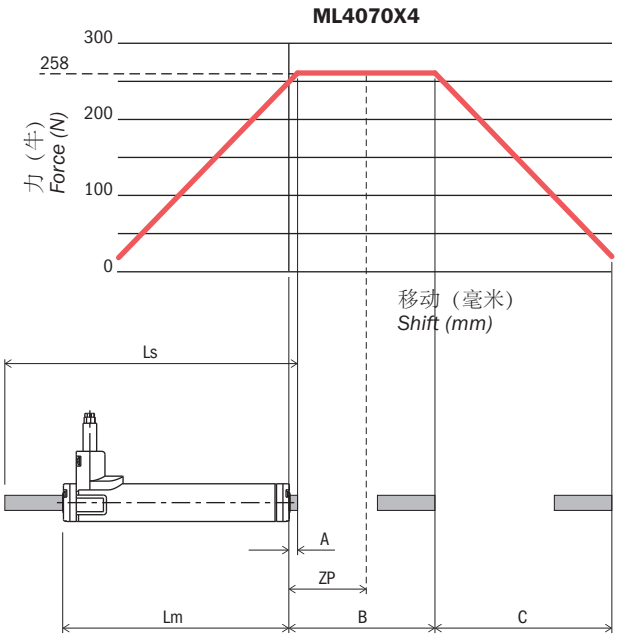

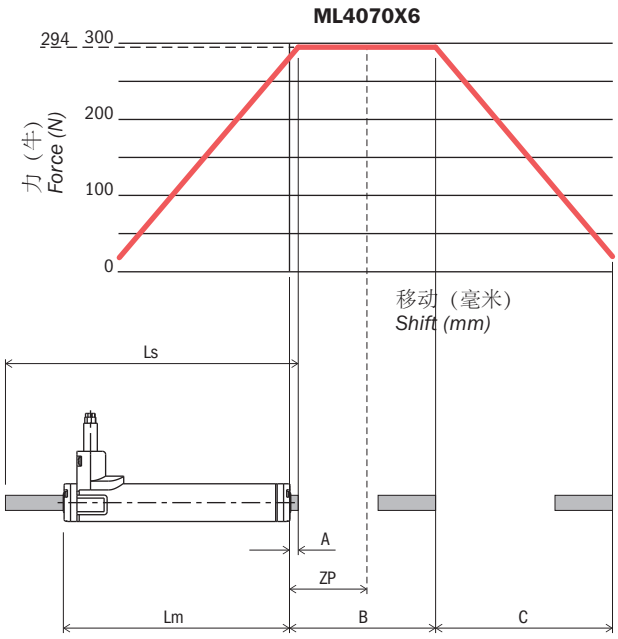

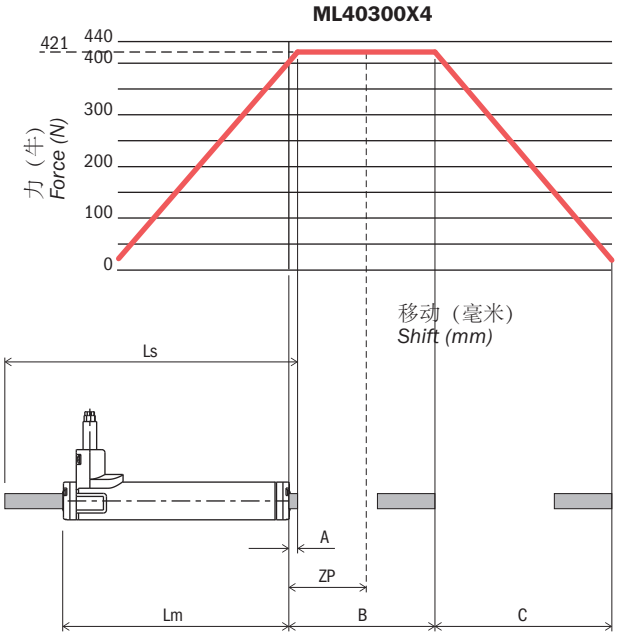

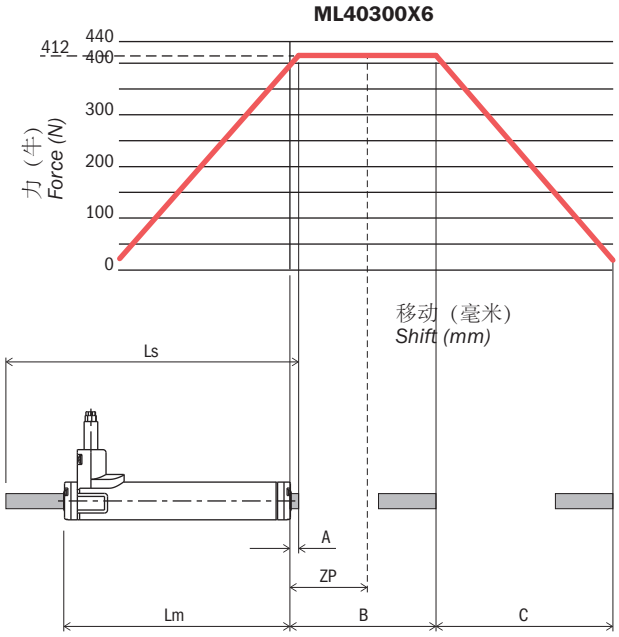

电气连接

Electrical connections

ML25 / ML40	
相 *Phase*	颜色 *Color*
U	灰色 *Grey*
V	黄色 *Yellow*
W	棕色 *Brown*
PTC	白色 *White*
PTC	粉红 *Pink*
GND	绿色 *Green*

线缆特征 / Cable futures	
外径 *External diameter*	Ø 9 mm
导体 *Conductors*	2x18 AWG + 4x14 AWG
导体标准 *Conductors distinction*	DIN 47100
额定参数 *Rating*	-30°C/+80°C; 600V
最高速度 *Maximum speed*	120 m/min
最高加速度 *Maximum acceleration*	7 m/s²
弯曲半径 *Bending radius*	45 mm
参考标准 *Reference norm*	UI 1581, UL 758, cURus AWM Style 20234

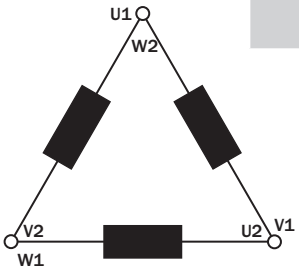

尺寸（毫米）
Dimensions (mm)

	ML2570X4 ML25300X4	ML2570X6 ML25300X6	ML4070X4 ML40300X4	ML4070X6 ML40300X6
L1	17.5	17.5	22	22
L2	9	9	16	16
L3	22	22	22	22
L4	8.5	8.5	6	6
L5	200	270	204	275
H1	34	34	40	40
H2	17.6	17.6	25	25
B1	20	20	21	21
B2	26	26	38	38
D1	Ø25	Ø25	Ø40	Ø40
D2	Ø9	Ø9	Ø9	Ø9

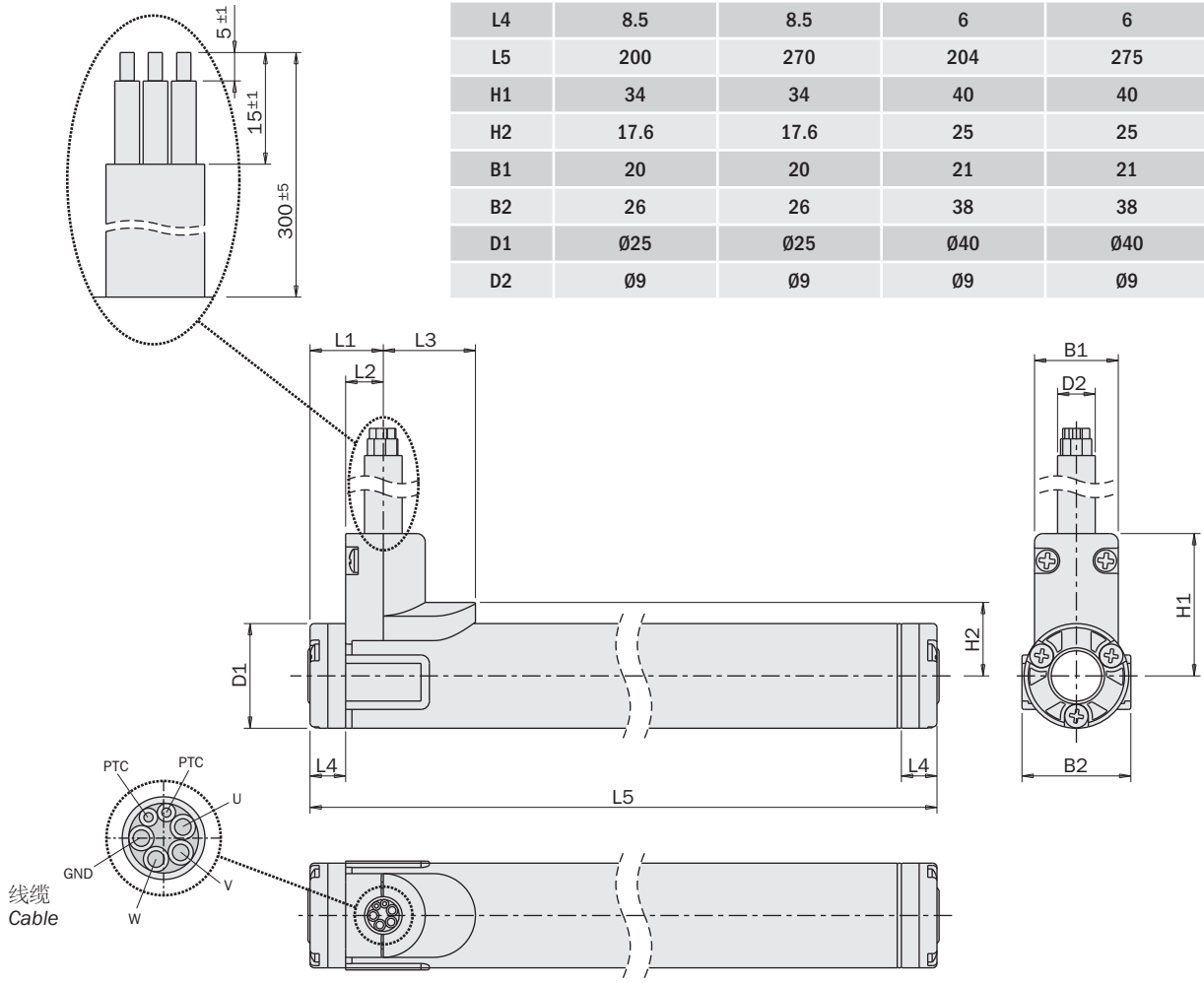

磁性滑轨

- 钕磁体。
- 不锈钢管， Ø12 毫米和 Ø20 毫米。
- 带有 M5 螺纹和 10 毫米销键的插头用于 ML12，带有 M8 螺纹和 16 毫米销键的插头用于 ML20。

Magnetic slider

- *Neodymium magnets.*
- *Stainless steel pipe, Ø12mm and Ø20mm.*
- *Plugs with M5 thread and 10mm key for ML12, with M8 thread and 16mm key for ML20.*

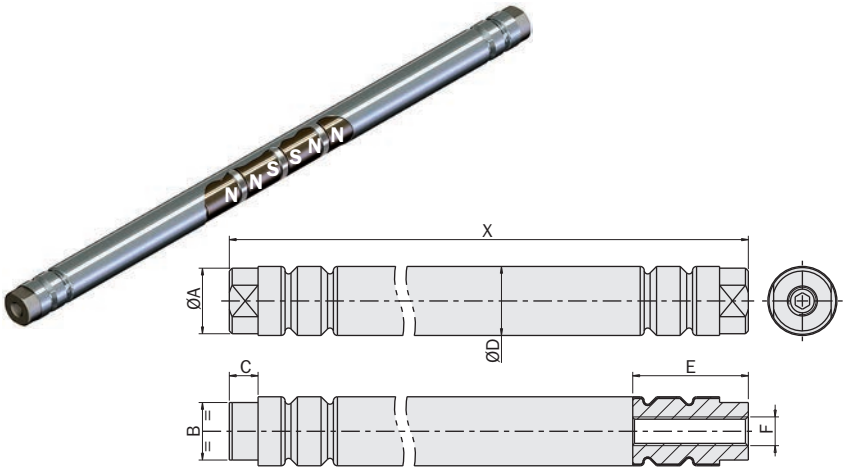

	ML25 可用 *Usable with ML25*	ML40 可用 *Usable with ML40*
	ML12	**ML20**
ØA	11.4 mm	18.9 mm
B	10 mm	16 mm
C	5 mm	8 mm
ØD	12 mm	20 mm
E	20 mm	30 mm
F	M5	M8

	ML12X10L218	ML12X13L271	ML12X16L325	ML12X20L395
标准长度 (X) *Standard length (X)*	218 mm	271 mm	325 mm	395 mm
质量 *Mass*	190 g	235 g	285 g	350 g
磁体数量 *Number of magnets*	10	13	16	20
极距 *Pole pitch*	35.4 mm	35.4 mm	35.4 mm	35.4 mm

	ML12X27L519	ML12X33L625	ML12X38L715	ML12X44L820
标准长度 (X) *Standard length (X)*	519 mm	625 mm	715 mm	820 mm
质量 *Mass*	460 g	560 g	655 g	735 g
磁体数量 *Number of magnets*	27	33	39	44
极距 *Pole pitch*	35.4 mm	35.4 mm	35.4 mm	35.4 mm

	ML20X10L238	ML20X14L309	ML20X18L380	ML20X21L433	ML20X27L542
标准长度 (X) *Standard length (X)*	238 mm	309 mm	380 mm	433 mm	542 mm
质量 *Mass*	490 g	620 g	760 g	865 g	1079 g
磁体数量 *Number of magnets*	10	14	18	21	27
极距 *Pole pitch*	35.4 mm	35.4 mm	35.4 mm	35.4 mm	35.4 mm

	ML20X33L646	ML20X44L842	ML20X55L1036	ML20X72L1338
标准长度 (X) *Standard length (X)*	646 mm	842 mm	1036 mm	1338 mm
质量 *Mass*	1285 g	1670 g	2055 g	2650 g
磁体数量 *Number of magnets*	33	44	55	72
极距 *Pole pitch*	35.4 mm	35.4 mm	35.4 mm	35.4 mm

变送器和传感器

ML 线性电机以及 LV 和 LVP 线性执行器可以配备变送器和传感器以控制移动。
代码 SE9ABZ1 和 SE9SIN1 识别增量位置变送器，代码 SE9HALL1 识别无法执行最初定时移动时正确控制电机要求的反馈信号。

- ABZ 或 SIN/COS 版本位置变送器。
- M12 8 极标准连接。
- 从滑轨磁场直接读取。
- ABZ 版本也可以提供最初定时的霍尔传感器。
- 传感器和变送器可以安装在电机的任意一侧。

请参见附件部分的其它商用变送器及其固定夹。

Transducers and sensors

ML linear motors and LV and LVP linear actuators can be supplied with transducers and sensors to control the motion. Codes SE9ABZ1 and SE9SIN1 identify the incremental position transducers while code SE9HALL1 identifies the feedback signals required for proper motor control in case the initial timing movement cannot be performed.

- *Position transducers, ABZ or SIN/COS versions.*
- *M12 8 poles standard connection.*
- *Direct reading from the magnetic field of the slider.*
- *The ABZ version can also be provided with Hall sensors for initial timing.*
- *Sensors and transducers can be fitted on either side of the motor.*

Please refer to the accessories section for other commercial transducers and their fixing clamps

	SE9ABZ1	SE9ABZ1-HR	SE9SIN1 (*)	SE9HALL1	
回路输出	ABZ	ABZ	SIN/COS	3 HALL	*Circuit output*
输出信号	RS-422	RS-422	1 Vss	Open C.	*Output signal*
传感器电源	5 Vdc				*Sensor power supply*
电流消耗	50 mA	50 mA	25 mA	25 mA	*Current consumption*
工作速度	6 m/s	2 m/s	4 m/s	6 m/s	*Working speed*
运行温度	-40 ÷ +85 °C				*Operating temperature*
分辨率	±25 µm	±10 µm	-	60°	*Resolution*
重复性	±25 µm	±10 µm	-	±50 µm	*Repeatability*
极距	35.4 mm				*Pole pitch*
每转周期 (CPR)	354	885	1	-	*Cycles per revolution (CPR)*
每转脉冲/正弦曲线 (PPR)	1416 imp.	3540 imp.	1 sin.	-	*Pulses / Sinusoids per revolution (PPR)*
连接	8 极 /*M12, 8 poli*				*Connection*
针脚 1（白色）	Z -		Z -	N/C	*Pin 1 (White)*
针脚 2（棕色）	+ 5 Vdc		+ 5 Vdc	+ 5 Vdc	*Pin 2 (Brown)*
针脚 3（绿色）	B -		COS -	N/C	*Pin 3 (Green)*
针脚 4（黄色）	B +		COS +	HALL 2	*Pin 4 (Yellow)*
针脚 5（灰色）	A -		SIN -	N/C	*Pin 5 (Grey)*
针脚 6（粉红色）	A +		SIN +	HALL 1	*Pin 6 (Pink)*
针脚 7（蓝色）	GND		GND	GND	*Pin 7 (Blue)*
针脚 8（红色）	Z +		Z +	HALL 3	*Pin 8 (Red)*
电源 LED 灯	绿色 /*Green*		绿色 /*Verde*		*Power supply LED*
ON 输出 LED 灯	黄色 /*Yellow*		-		*ON output LED*
NO 磁场 LED 灯	红色 / *Red*		-		*NO magnetic field LED*
材料	PA66+FV30% - Nichel OT63 - Epoxy resin				*Materials*
IP 防护等级	IP67				*IP rating*
参考标准	CE				*Reference standards*
(*) 可选电压	24 Vdc				*(*) Optional voltage*
参考标准	EN 61000-6-2 + EC + IS1; EN 61000-6-4				*Reference standards*

(*) 正在构造
Under construction

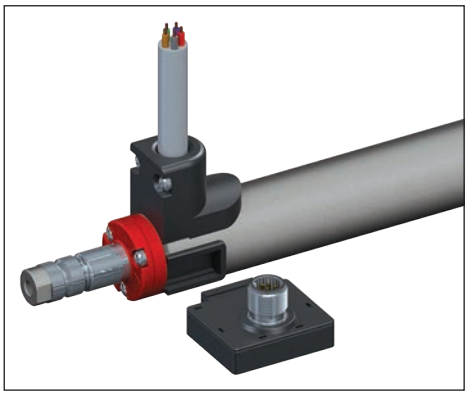

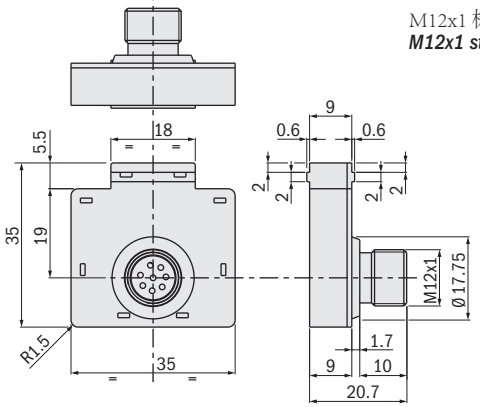

M12x1 标准阴性连接器
M12x1 standard female connector

CFGM1200825P
直形
straight

CFGM1290825P
角形
angular

09/2016

反馈信号 *Feedback signals*

SE9ABZ1

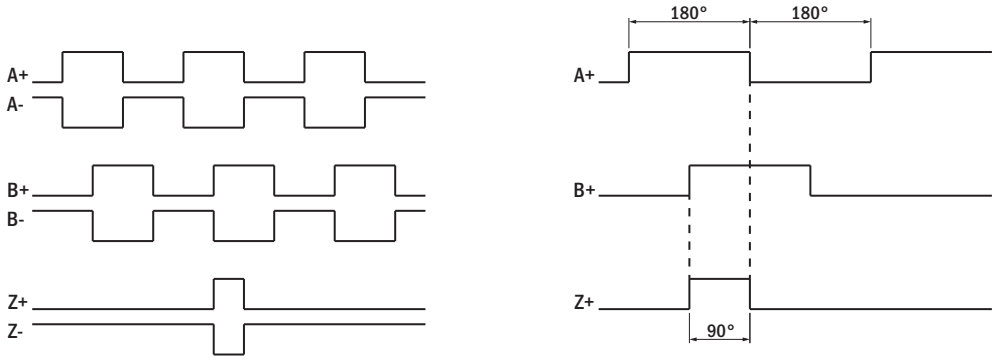

SE9SIN1

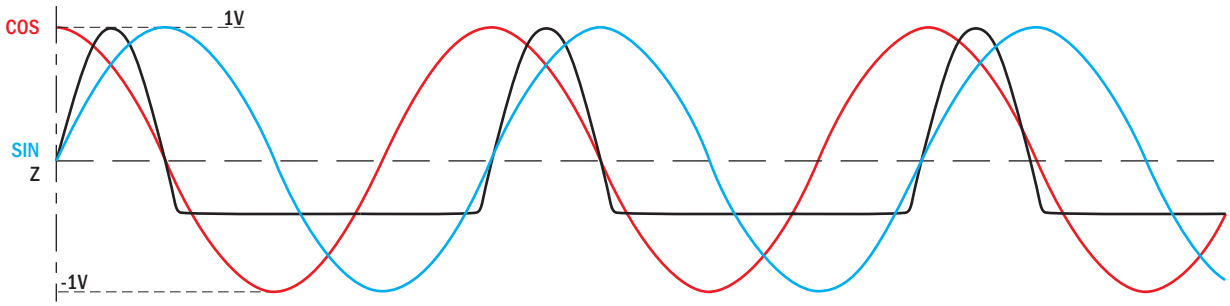

SE9HALL1

机械距离	0	5.9	11.8	17.7	23.6	29.5	35.4	*Mechanical pitch*
电气等级	0	60	120	180	240	300	360	*Electrical degrees*

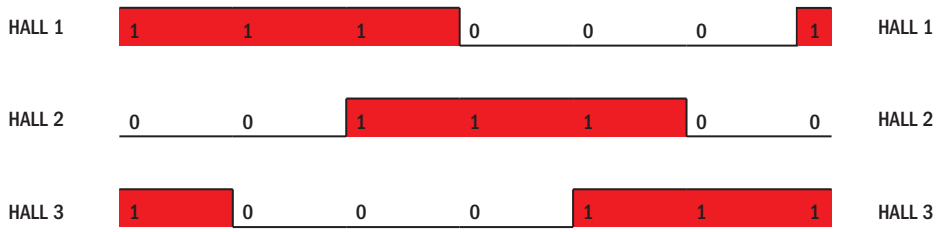

驱动器

Gimatic 线性电机兼容市场上的大多数驱动器。
下面是一些经过试验的商用驱动器的列表。

Driver

The Gimatic linear motor is compatible with most drives on the market.
The following is a list of some commercial drives tested.

LinMot	B1100; E1100
Copley	Accelnet
Hitachi	Servo AD
Advanced Motion Control	DPRALTE-020B080
Technosoft	IDM680
Janaer	Ecovario 114
BR Automation	Apocos
Elmo	Harmonica Drive
Servotronix	LVD drive
MaxonMotor	Epos Drive 70/10
LeadShine	ACS806
Aerotech	Ensemble HPE 10
Baldor / ABB	MicroFlex
Galil	CDS-3310
Infranor	XtraPlusPac
HDT	Digifox
Siemens	SINAMICS S120
Selema	Micro ECO
Stöber	SD6
Schneider Electric	LXM32MU90M2

典型结构举例

Example of a typical architecture

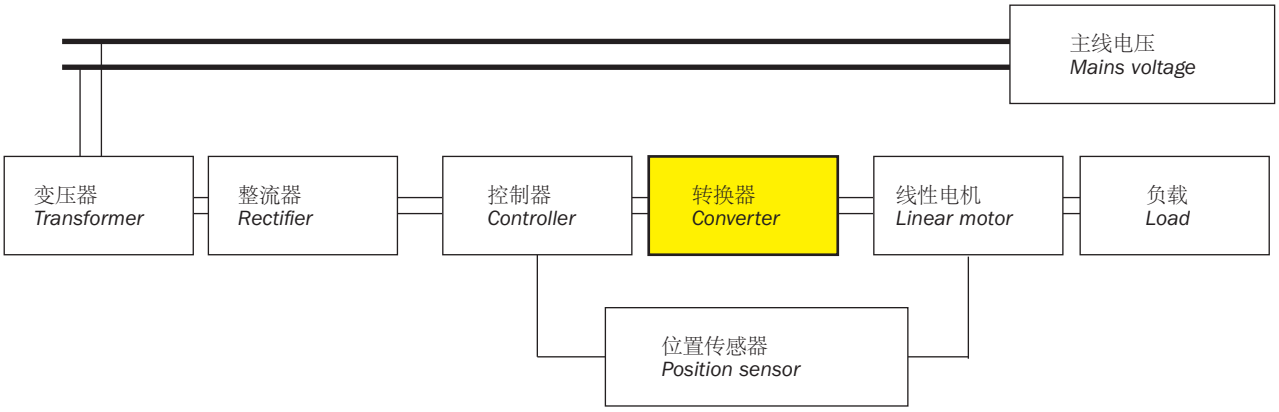

注释
Notes

电动线性执行器

- 集成线性电机。
- 集成编码器传感器。
- 循环球轴承导向系统。
- 50 毫米、100 毫米、150 毫米和 200 毫米行程。
- T 型螺母安装件。
- M12 标准电气连接。
- 兼容市场上的几种驱动器。
- 可选质量补偿器。
- 可选磁性回位传感器。
- 兼容 LVP 电动线性导向器

Electrical linear actuators

- *Integrated linear motor.*
- *Integrated encoder sensor.*
- *Recirculating ball-bearing guide system.*
- *50mm, 100mm, 150mm and 200mm strokes.*
- *T-nut mounting.*
- *M12 standard electrical connection.*
- *Compatible with several drivers available on the market.*
- *Optional weight compensators.*
- *Optional magnetic homing sensors.*
- *Compatible with LVP electric linear guides*

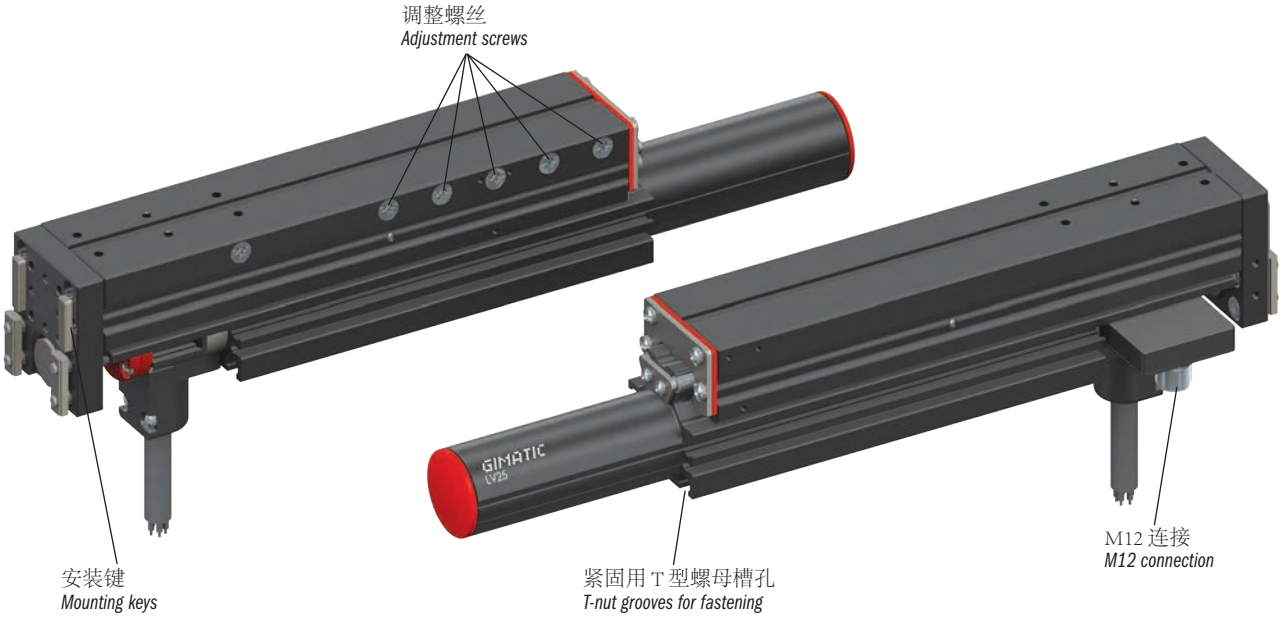

循环球轴承导向器

- 用于较轻重量和散热的挤出铝内结构。
- 插入铝质主体内的硬化钢筋。
- 长寿型轴承。
- 用于零反冲调整的可调整预负载。

Recirculating ball bearing guide

- *Structure in extruded aluminium designed to be lightweight and dissipate heat.*
- *Hardened steel bars inserted in the aluminium body.*
- *Long life bearings.*
- *Adjustable preloading for zero backlash adjustment.*

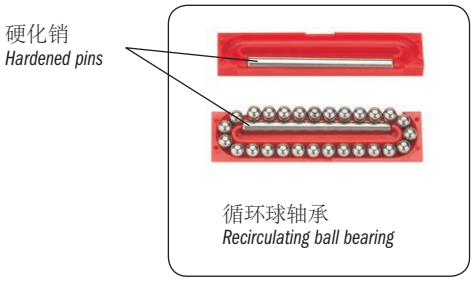

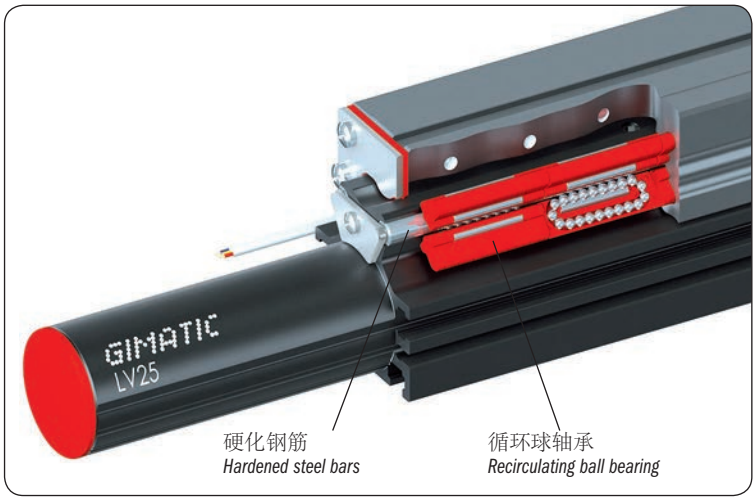

应用示例

用线性电机提供动力的 Y-Z 拾取放置操作器。

Application example

Y-Z Pick & Place manipulator, powered by linear motors.

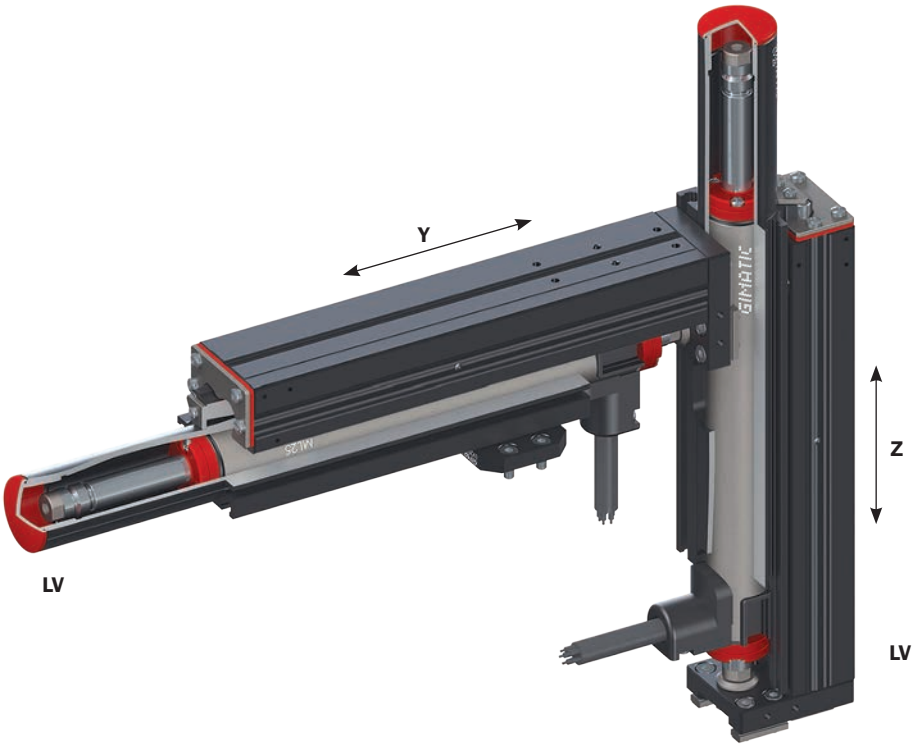

应用示例

带有端口的 X-Y-Z 系统。

Application example

X-Y-Z system with portal.

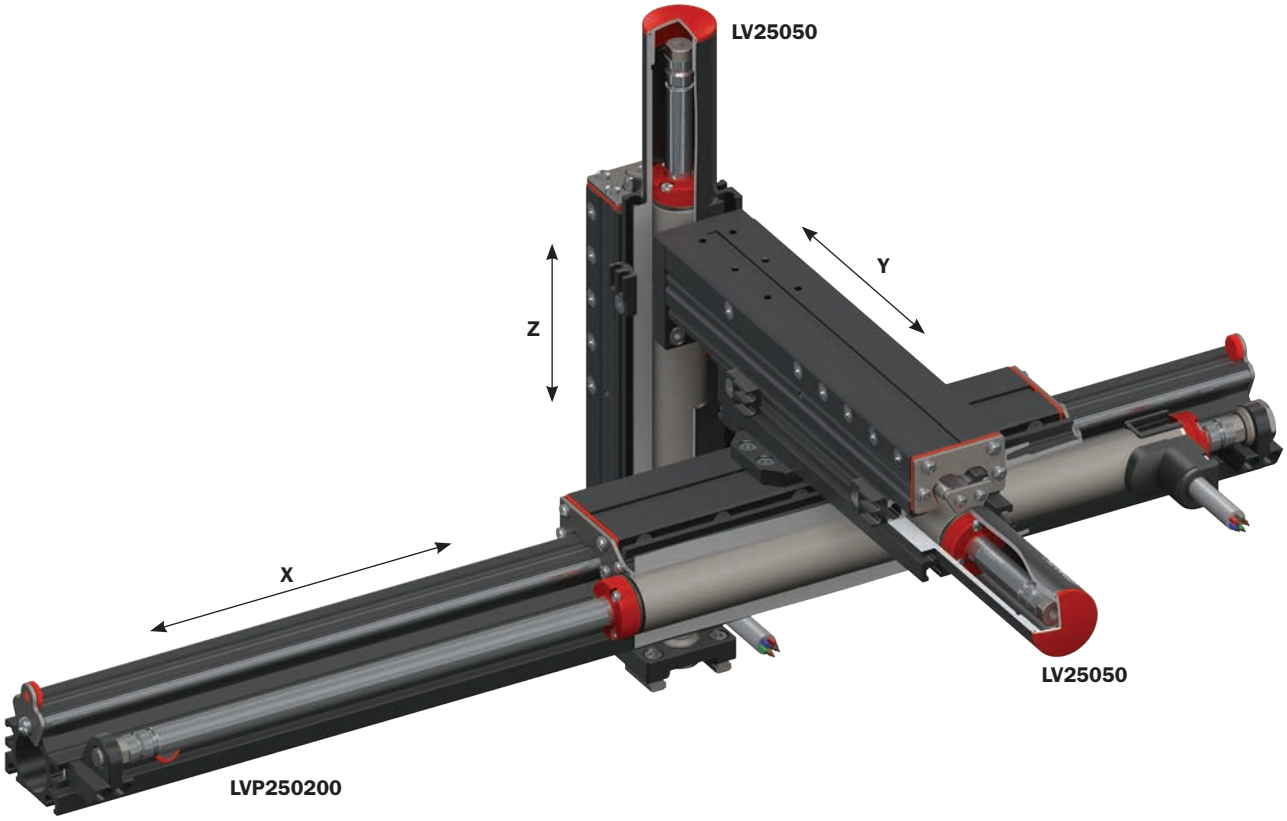

主要特点 *Main features*

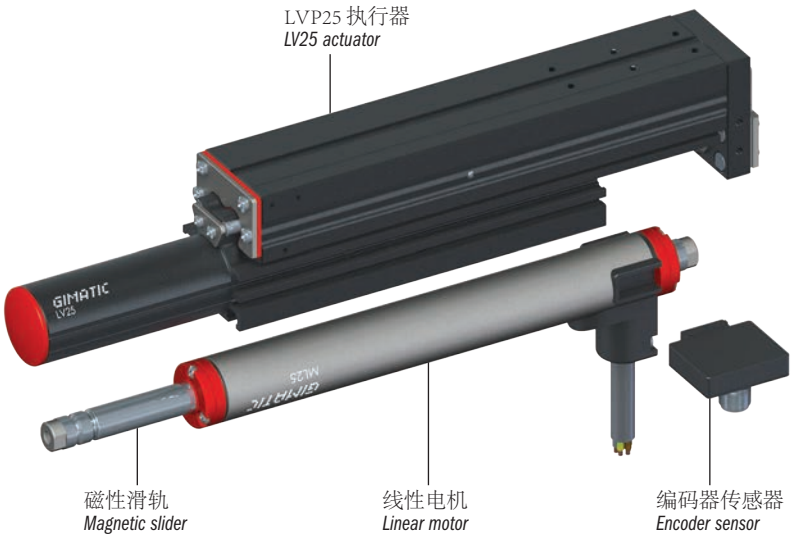

(*)
正在构造
Under construction

	LV25050		LV25100		LV25150		LV25200	
行程 *Stroke*	50 mm		100 mm		150 mm		200 mm	
与滑轨为一体的部件质量 *Mass of the parts integral with the slider*	560 g		670 g		850 g		1050 g	
与定子为一体的部件质量 *Mass of the parts integral with the stator*	610 g		710 g		975 g		1135 g	
总质量（包括电机） *Total Mass (motor included)*	1170 g		1380 g		1825 g		2185 g	
订购代码 *Order code*	LV25050-70	LV25050-300	LV25100-70	LV25100-300	LV25150-70	LV25150-300	LV25200-70	LV25200-300
线性电机 *Linear motor*	ML2570X4	ML25300X4	ML2570X4	ML25300X4	ML2570X6	ML25300X6	ML2570X6	ML25300X6
总线电压 *BUS voltage*	72 Vdc	325 Vdc	72 Vdc	325 Vdc	72 Vdc	325 Vdc	72 Vdc	325 Vdc
峰值力 *Peak force*	98.1 N	117 N	98.1 N	117 N	105.4 N	131.6 N	105.4 N	131.6 N
峰值电流（100° C） *Peak current*	7.7 A	3.1 A	7.7 A	3.1 A	5.2 A	2.1 A	5.2 A	2.1 A
力常数 *Force constant*	12.7 N/A	34.4 N/A	12.7 N/A	34.4 N/A	20.3 N/A	62.7 N/A	20.3 N/A	62.7 N/A
连续力 *Continuous force*	25 N	20 N	25 N	20 N	42 N	37 N	42 N	37 N
连续电流（100° C） *Continuous current*	2 A	0.6 A	2 A	0.6 A	2.1 A	0.6 A	2.1 A	0.6 A
热阻 *Thermal resistance*	2.15 °C/W	2.47 °C/W	2.15 °C/W	2.47 °C/W	1.2 °C/W	1.52 °C/W	1.2 °C/W	1.52 °C/W
最高速度 *Maximum speed*	2 m/s							
温度范围 *Temperature range*	5 ÷ 80 °C							
环境防护等级 *Environmental Degree*	IP67							
分辨率 *Resolution*	±25 µm							

主要特点 *Main features*

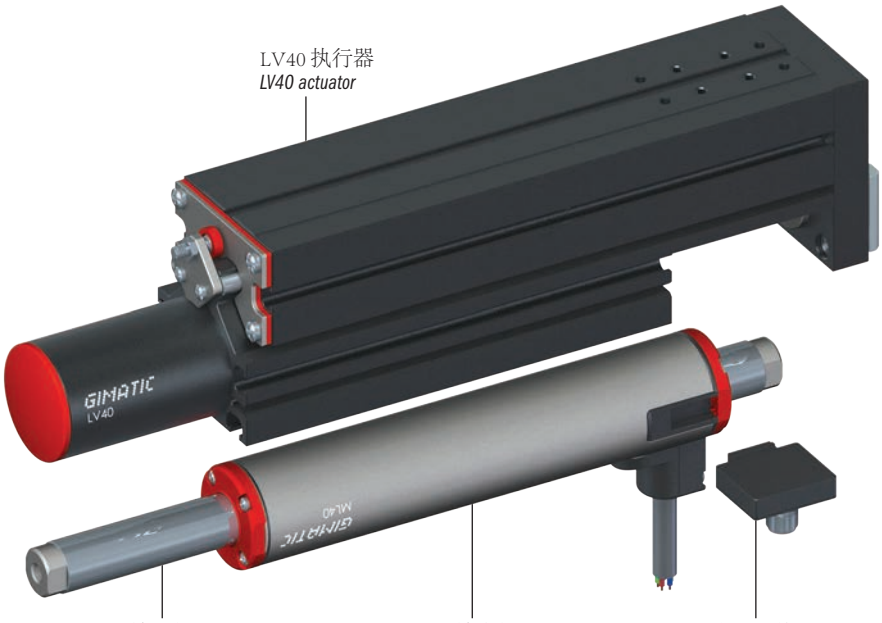

(*)
正在构造
Under construction

	LV40050		LV40100		LV40150		LV40200	
行程 *Stroke*	50 mm		100 mm		150 mm		200 mm	
与滑轨为一体的部件质量 *Mass of the parts integral with the slider*	1350 g		1840 g		2150 g		2420 g	
与定子为一体的部件质量 *Mass of the parts integral with the stator*	1380 g		1750 g		2280 g		2445 g	
总质量（包括电机） *Total Mass (motor included)*	2730 g		3590 g		4430 g		4865 g	
订购代码 *Order code*	LV40050-70	LV40050-300	LV40100-70	LV40100-300	LV40150-70	LV40150-300	LV40200-70	LV40200-300
线性电机 *Linear motor*	ML4070X4	ML40300X4	ML4070X4	ML40300X4	ML4070X6	ML40300X6	ML4070X6	ML40300X6
总线电压 *BUS voltage*	72 Vdc	325 Vdc	72 Vdc	325 Vdc	72 Vdc	325 Vdc	72 Vdc	325 Vdc
峰值力 *Peak force*	258 N	421 N	258 N	421 N	294 N	412 N	294 N	412 N
峰值电流（100° C） *Peak current*	19 A	8.8 A	19 A	8.8 A	14.2 A	5.8 A	14.2 A	5.8 A
力常数 *Force constant*	13.6 N/A	47.8 N/A	13.6 N/A	47.8 N/A	20.7 N/A	71.1 N/A	20.7 N/A	71.1 N/A
连续力 *Continuous force*	58 N	57 N	58 N	57 N	83 N	71 N	83 N	71 N
连续电流（100° C） *Continuous current*	4.3 A	1.2 A	4.3 A	1.2 A	4 A	1 A	4 A	1 A
热阻 *Thermal resistance*	1.3 °C/W	1.63 °C/W	1.3 °C/W	1.63 °C/W	1 °C/W	1.4 °C/W	1 °C/W	1.4 °C/W
最高速度 *Maximum speed*	2 m/s							
温度范围 *Temperature range*	5 ÷ 80 °C							
环境防护等级 *Environmental Degree*	IP67							
分辨率 *Resolution*	±25 µm							

LV25050…

执行器推力依赖于初级绕组和次级绕组之间的偶合和相对速度。轴承座的开口从电机拔开磁性滑轨，因此成比例地降低力度。

LV25050...

The actuator thrust depends on the coupling and the relative speed between the primary winding and the secondary winding. The opening of the carrier extracts the magnetic slider from the motor thus proportionally decreasing the force.

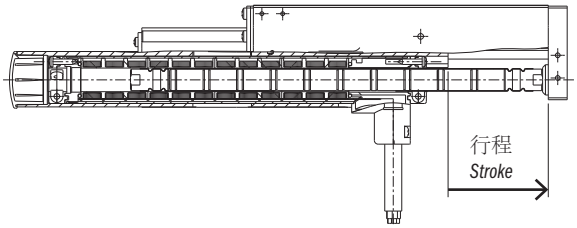

LV25050-300 (ML25300X4)
LV25050-70 (ML2570X4)

	力 *Force*	行程 *Stroke*
A	117 N	2.5 mm
B	74.3 N	50 mm
C	98.1 N	2.5 mm
D	63.1 N	50 mm

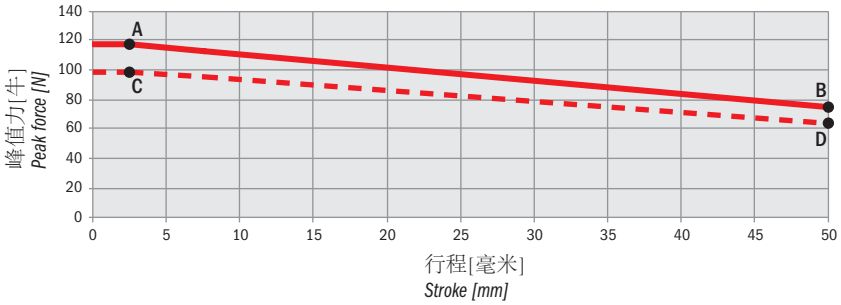

LV25100…

执行器推力依赖于初级绕组和次级绕组之间的偶合和相对速度。轴承座的开口从电机拔开磁性滑轨，因此成比例地降低力度。

LV25100...

The actuator thrust depends on the coupling and the relative speed between the primary winding and the secondary winding. The opening of the carrier extracts the magnetic slider from the motor thus proportionally decreasing the force.

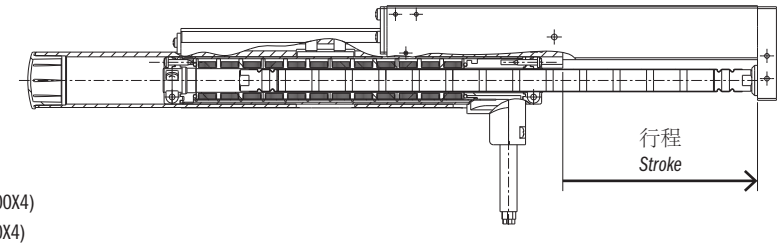

LV25100-300 (ML25300X4)
LV25100-70 (ML2570X4)

	力 *Force*	行程 *Stroke*
A	117 N	55.5 mm
B	77 N	100 mm
C	98.1 N	55.5 mm
D	65.3 N	100 mm

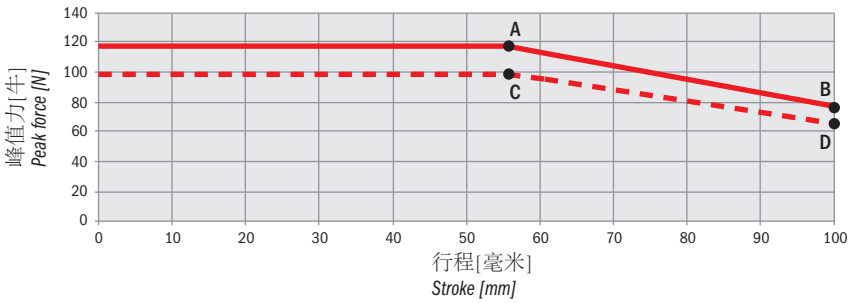

LV25150…

执行器推力依赖于初级绕组和次级绕组之间的偶合和相对速度。轴承座的开口从电机拔开磁性滑轨，因此成比例地降低力度。

LV25150...

The actuator thrust depends on the coupling and the relative speed between the primary winding and the secondary winding. The opening of the carrier extracts the magnetic slider from the motor thus proportionally decreasing the force.

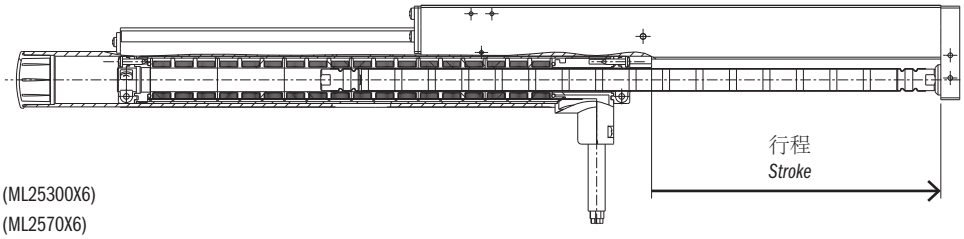

LV25150-300 (ML25300X6)
LV25150-70 (ML2570X6)

	力 *Force*	行程 *Stroke*
A	131.6 N	37.7 mm
B	54.4 N	150 mm
C	105.4 N	37.7 mm
D	45 N	150 mm

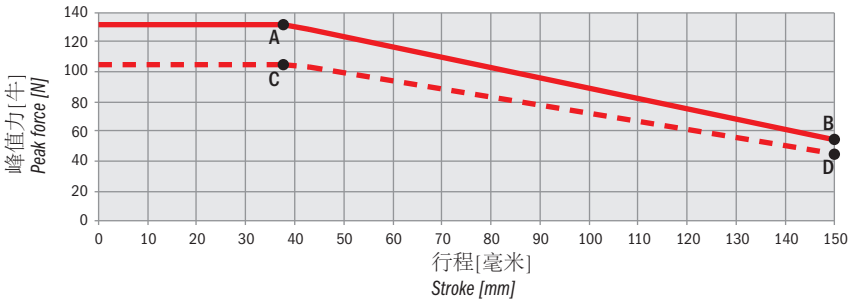

LV25200…

执行器推力依赖于初级绕组和次级绕组之间的偶合和相对速度。轴承座的开口从电机拔开磁性滑轨，因此成比例地降低力度。

LV25200...

The actuator thrust depends on the coupling and the relative speed between the primary winding and the secondary winding. The opening of the carrier extracts the magnetic slider from the motor thus proportionally decreasing the force.

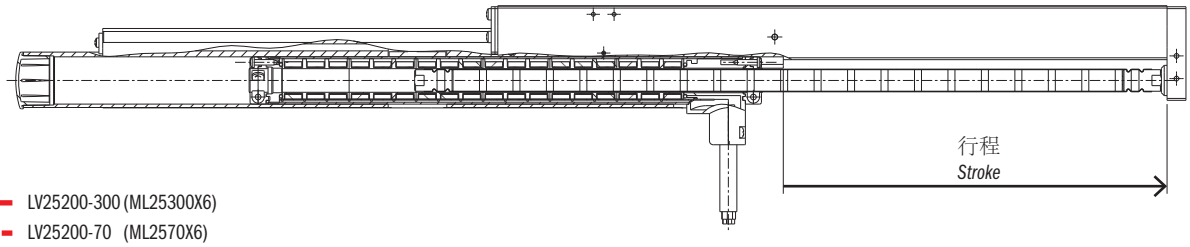

LV25200-300 (ML25300X6)
LV25200-70 (ML2570X6)

	力 *Force*	行程 *Stroke*
A	131.6 N	107.7 mm
B	68.1 N	200 mm
C	105.4 N	107.7 mm
D	55.7 N	200 mm

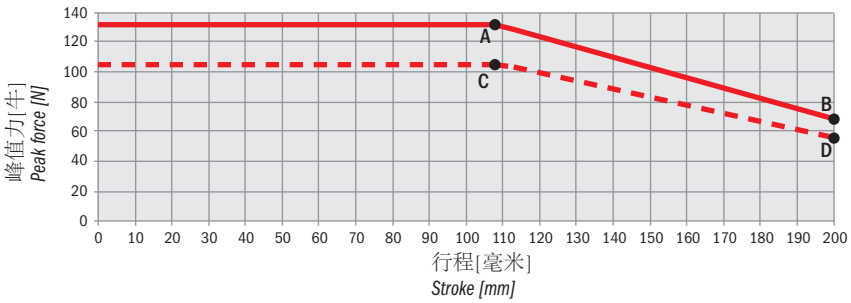

LV40050…

执行器推力依赖于初级绕组和次级绕组之间的偶合和相对速度。轴承座的开口从电机拔开磁性滑轨，因此成比例地降低力度。

LV40050...

The actuator thrust depends on the coupling and the relative speed between the primary winding and the secondary winding. The opening of the carrier extracts the magnetic slider from the motor thus proportionally decreasing the force.

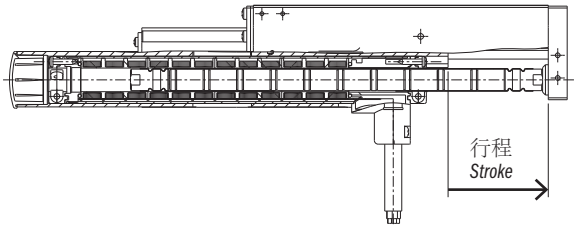

LV40050-300 (ML40300X4)
LV40050-70 (ML4070X4)

	力 *Force*	行程 *Stroke*
A	421 N	6 mm
B	277 N	50 mm
C	258 N	6 mm
D	189 N	50 mm

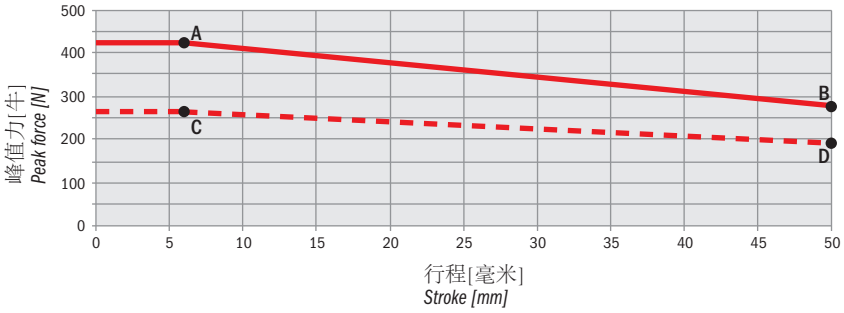

LV40100…

执行器推力依赖于初级绕组和次级绕组之间的偶合和相对速度。轴承座的开口从电机拔开磁性滑轨，因此成比例地降低力度。

LV40100...

The actuator thrust depends on the coupling and the relative speed between the primary winding and the secondary winding. The opening of the carrier extracts the magnetic slider from the motor thus proportionally decreasing the force.

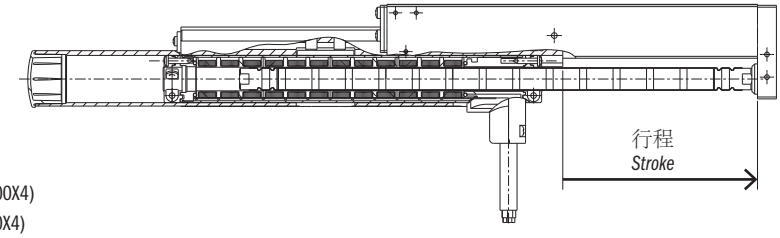

LV40100-300 (ML40300X4)
LV40100-70 (ML4070X4)

	力 *Force*	行程 *Stroke*
A	421 N	77 mm
B	346 N	100 mm
C	258 N	77 mm
D	236 N	100 mm

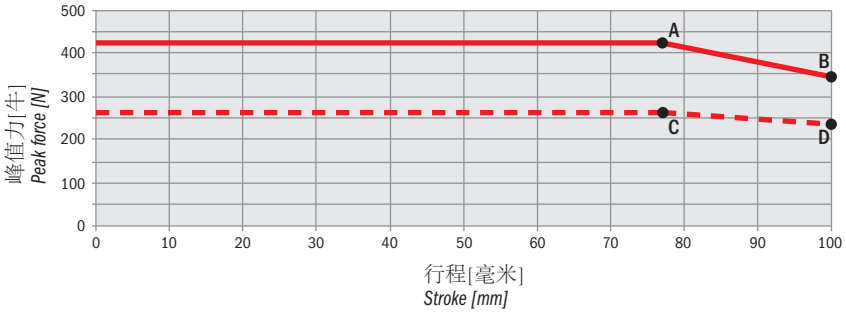

LV40150…

执行器推力依赖于初级绕组和次级绕组之间的偶合和相对速度。轴承座的开口从电机拔开磁性滑轨，因此成比例地降低力度。

LV40150...

The actuator thrust depends on the coupling and the relative speed between the primary winding and the secondary winding. The opening of the carrier extracts the magnetic slider from the motor thus proportionally decreasing the force.

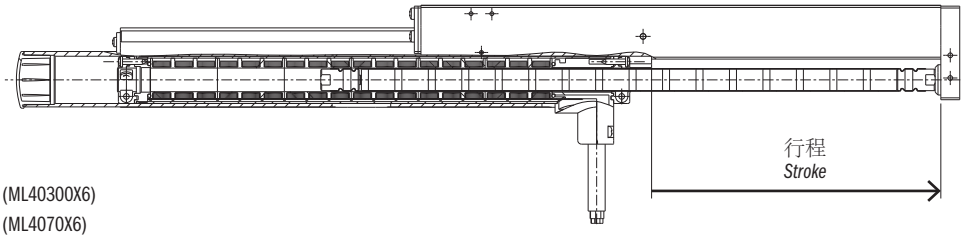

LV40150-300 (ML40300X6)
LV40150-70 (ML4070X6)

	力 *Force*	行程 *Stroke*
A	412 N	77 mm
B	260 N	150 mm
C	294 N	77 mm
D	185 N	150 mm

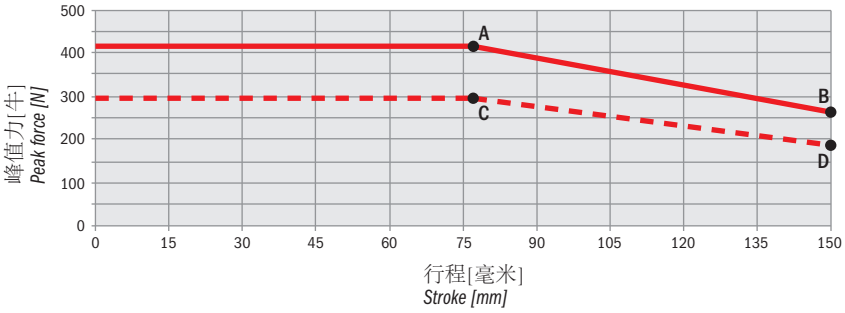

LV40200...

执行器推力依赖于初级绕组和次级绕组之间的偶合和相对速度。轴承座的开口从电机拔开磁性滑轨，因此成比例地降低力度。

LV40200...

The actuator thrust depends on the coupling and the relative speed between the primary winding and the secondary winding. The opening of the carrier extracts the magnetic slider from the motor thus proportionally decreasing the force.

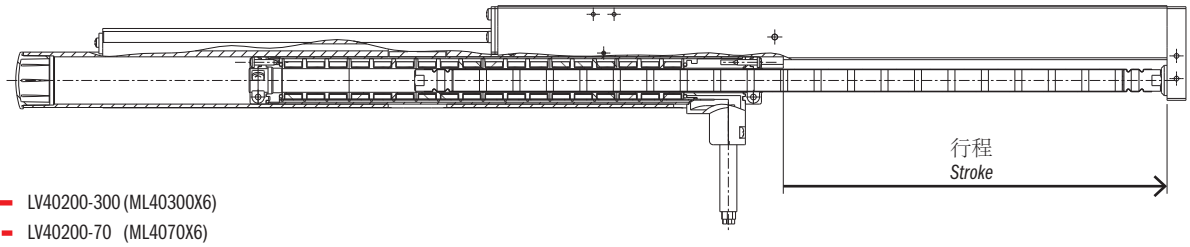

LV40200-300 (ML40300X6)
LV40200-70 (ML4070X6)

	力 *Force*	行程 *Stroke*
A	412 N	130 mm
B	266 N	200 mm
C	294 N	130 mm
D	190 N	200 mm

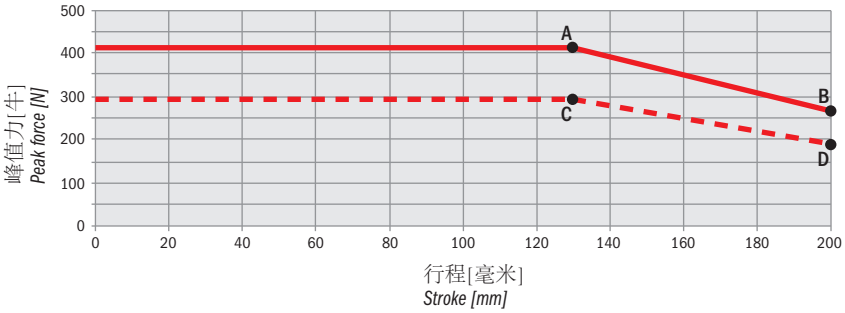

安全负载

检查下面的表。
负载过大会损坏线性单元和造成功能故障。

Y0 和 Z0 的尺寸识别线性轴承的中心（在最大开口条件下测量的尺寸）。

Fx s、Fz s、Mx s、My s、Mz s 为最大允许静态负载。
Fx d、Fz d、Mx d、My d、Mz d 为最大允许动态负载。
当轴承座静止时，可以施加静态负载，当轴承座运行时，可以施加动态负载。

动态负载表示以 100 万全开和全闭周期试验执行器时的极限负载。

Safety loads

Check the tables below.
Excessive loads can damage the linear unit and cause functioning troubles.

The dimensions Y0 and Z0 identify the centre of the linear bearing (dimensions measured under conditions of maximum opening).

Fx s, Fz s, Mx s, My s, Mz s are maximum permitted static loads.
Fx d, Fz d, Mx d, My d, Mz d are maximum permitted dynamic loads.
The static loads can be applied when the carrier is motionless, the dynamic loads when the carrier is running.

The dynamic load represents the limit load at which actuators are tested with 1 million full opening and closing cycles.

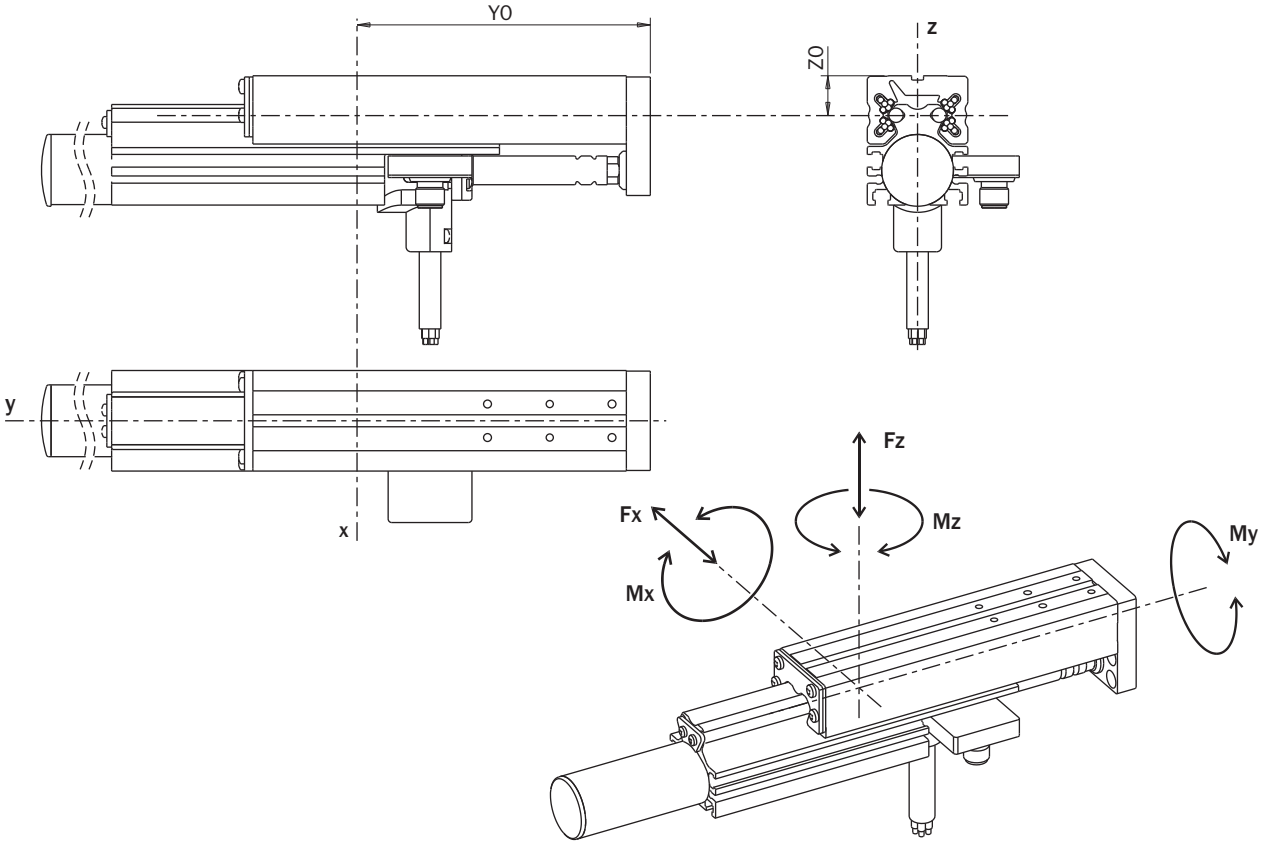

	LV25050	LV25100	LV25150	LV25200	LV40050	LV40100	LV40150	LV40200
Zo	16.5 mm	16.5 mm	16.5 mm	16.5 mm	21 mm	21 mm	21 mm	21 mm
Yo	122.5 mm	162.5 mm	227 mm	291.5 mm	107 mm	178 mm	228 mm	278 mm
Fx s	120 N	120 N	160 N	200 N	160 N	250 N	250 N	250 N
Fz s	120 N	120 N	160 N	200 N	160 N	250 N	250 N	250 N
Mx s	19 Nm	19 Nm	28 Nm	36 Nm	24 Nm	56 Nm	56 Nm	56 Nm
My s	11 Nm	11 Nm	14 Nm	18 Nm	20 Nm	30 Nm	30 Nm	30 Nm
Mz s	19 Nm	19 Nm	28 Nm	36 Nm	24 Nm	56 Nm	56 Nm	56 Nm
Fx d	60 N	60 N	80 N	100 N	80 N	120 N	120 N	120 N
Fz d	60 N	60 N	80 N	100 N	80 N	120 N	120 N	120 N
Mx d	3.8 Nm	3.8 Nm	5.6 Nm	7.2 Nm	6 Nm	14 Nm	14 Nm	14 Nm
My d	2.2 Nm	2.2 Nm	2.8 Nm	3.6 Nm	5 Nm	8 Nm	8 Nm	8 Nm
Mz d	3.8 Nm	3.8 Nm	5.6 Nm	7. 2 Nm	6 Nm	14 Nm	14 Nm	14 Nm

挠度

图形以力 A、B 或 C 和滑轨的行程为函数显示三个所示方向的挠度 f（毫米）。

Deflection

The graphs show the deflection f (mm) in the three directions shown, as a function of forces A, B or C and the stroke of the slide.

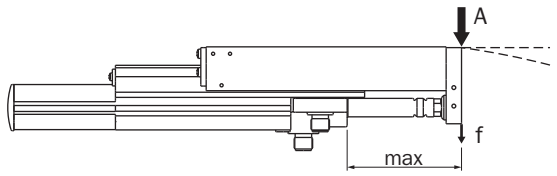

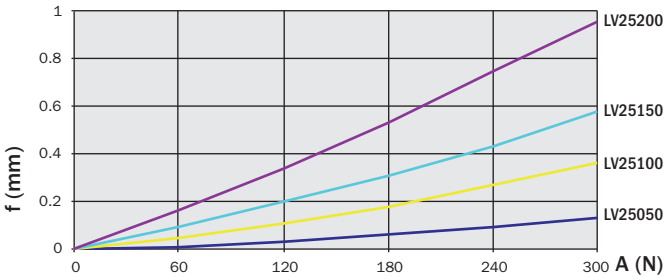

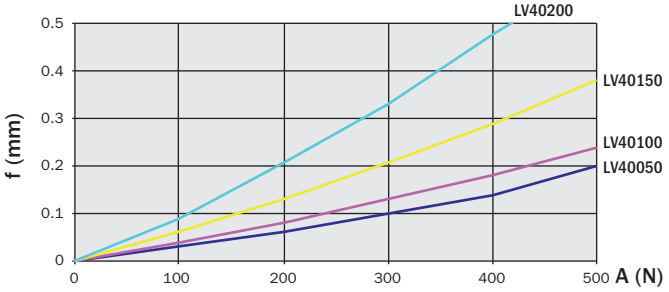

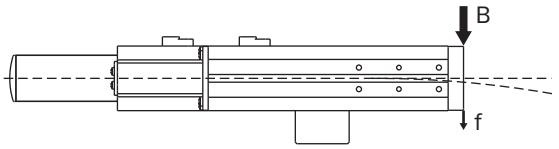

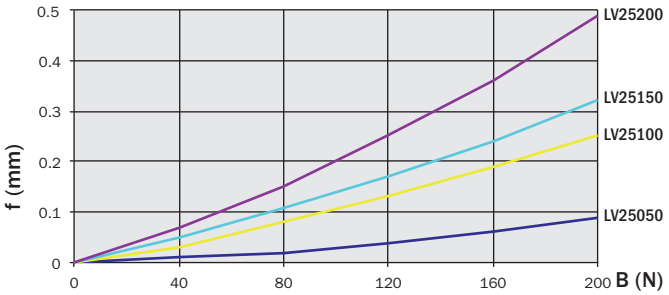

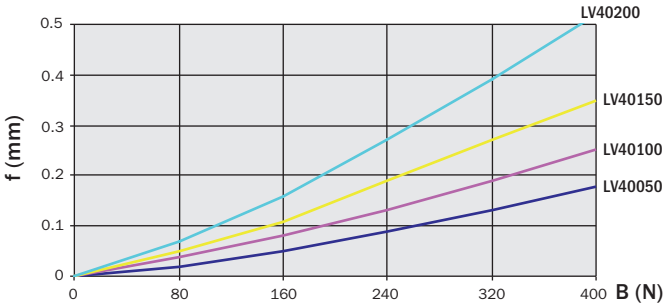

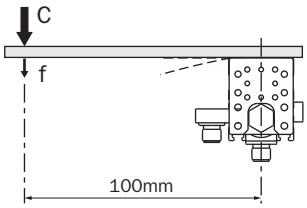

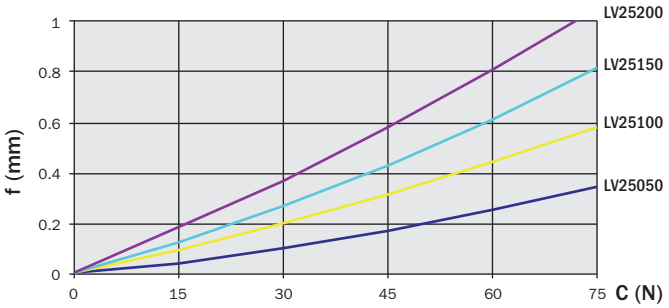

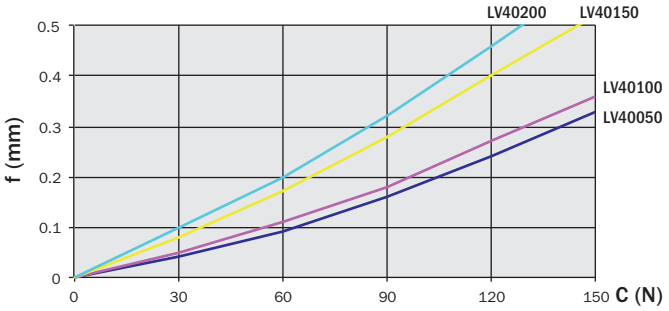

尺寸（毫米）
Dimensions (mm)

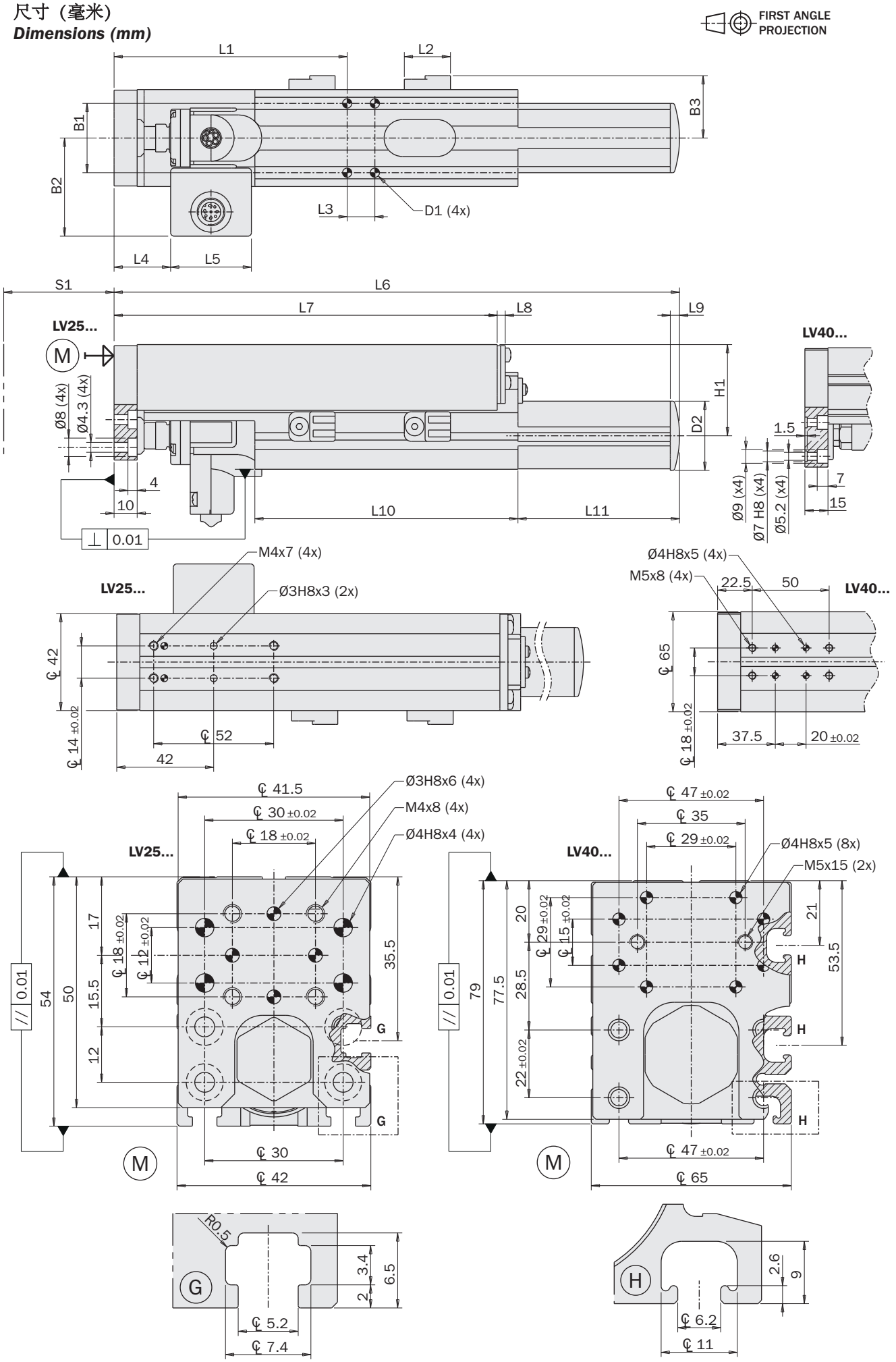

09/2016

尺寸（毫米）
Dimensions (mm)

		LV25050-...	LV25100-...	LV25150-...	LV25200-...	LV40050-...	LV40100-...	LV40150-...	LV40200-...
B1	±0.02	30	30	30	30	29	29	29	29
B2		42.5	42.5	42.5	42.5	48.5	48.5	48.5	48.5
B3		27	27	27	27	38.5	38.5	38.5	38.5
L1		101	101	101	101	95	95	95	95
L2		20	20	20	20	15	15	15	15
L3	±0.02	12	12	12	12	29	29	29	29
L4		24.5	24.5	24.5	24.5	47.5	47.5	47.5	47.5
L5		35	35	35	35	35	35	35	35
L6		245	296	349	419	275	335	406	460
L7		166	206	285	364	159	251	301	351
L8		3.5	3.5	3.5	3.5	4	4	4	4
L9		4	4	4	4	5	5	5	5
L10		114	154	233	312	87	179	229	279
L11		70	81	55	46	105	73	94	98
H1		39.5	39.5	39.5	39.5	66.5	66.5	66.5	66.5
D1		Ø4 H8	Ø4 H8	Ø4 H8	Ø4 H8	Ø4 H8	Ø4 H8	Ø4 H8	Ø4 H8
D2		Ø30	Ø30	Ø30	Ø30	Ø45	Ø45	Ø45	Ø45
S1		50	100	150	200	50	100	150	200

T 型螺母槽孔。
所有槽孔尺寸相同，可以使用 T 型螺母。

T-nut grooves
All slots have the same size and T-nuts can be used.

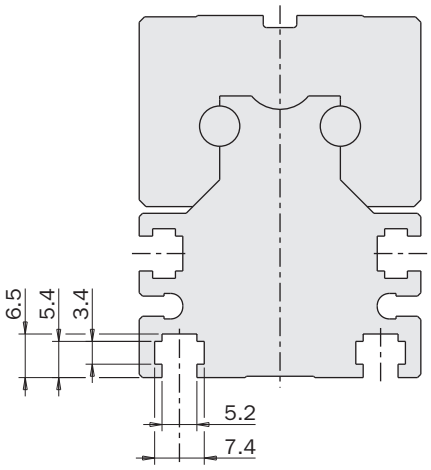

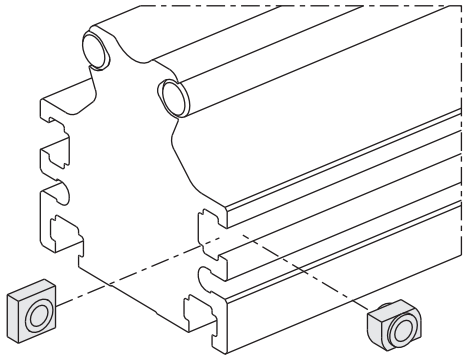

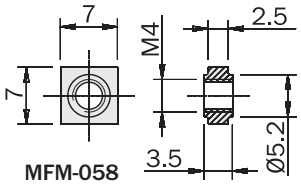

MFM-058

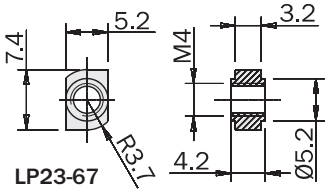

LP23-67

传感器

固定在滑轨轮廓和特殊支架上的磁性接近传感器（可选）执行额外行程和零位置检测。

如有需要，可以使用高灵敏度度传感器（带有 HS 后缀）。

Sensors

Extrastroke and zero position detection is made by magnetic proximity sensors (optional) fixed on the profile of the slide with special brackets.

High-sensitivity sensors (HS suffix) can be used, if necessary.

使用传感器：

Use sensors:

SN4N225-G	PNP	2.5 米线缆 / *2.5m Cable*
SN4M225-G	NPN	2.5 米线缆 / *2.5m Cable*
SN3N203-G	PNP	啮合式 M8 插头连接器 / *Snap M8 plug connector*
SN3M203-G	NPN	啮合式 M8 插头连接器 / *Snap M8 plug connector*
SS4N225-G	PNP	2.5 米线缆 / *2.5m Cable*
SS4M225-G	NPN	2.5 米线缆 / *2.5m Cable*
SS3N203-G	PNP	啮合式 M8 插头连接器 / *Snap M8 plug connector*
SS3M203-G	NPN	啮合式 M8 插头连接器 / *Snap M8 plug connector*

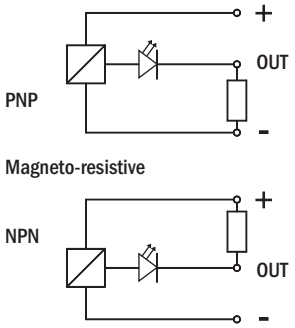

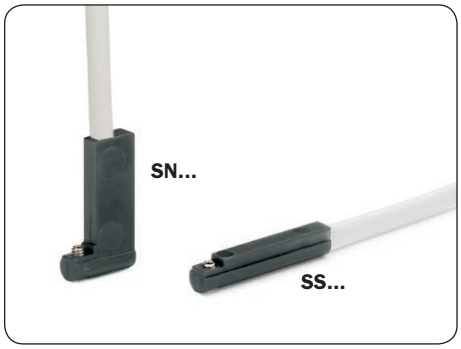

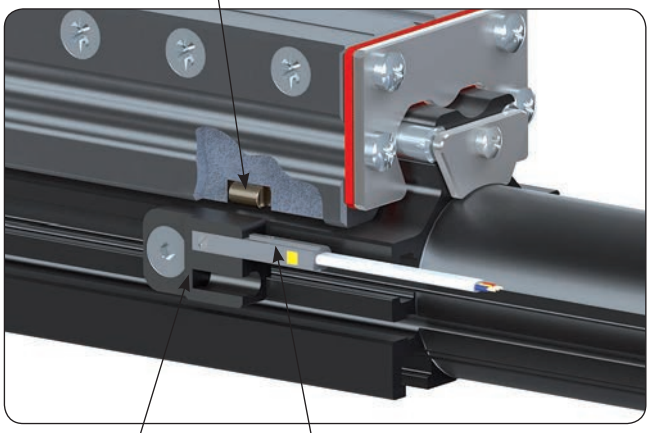

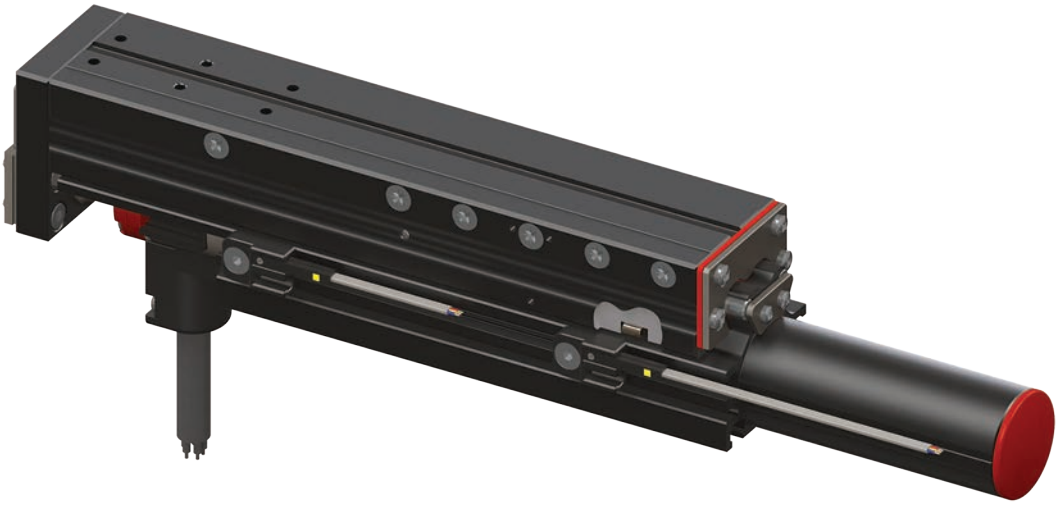

润滑

定期检查钢筋并在变干时润滑。
提供 90 克管装的适合润滑脂。
订购代码： GPL500-90。

Lubrication

Periodically check the steel bars and lubricate when dry.
The suitable grease is available in 90 grams tubes.
Ordering code: GPL500-90.

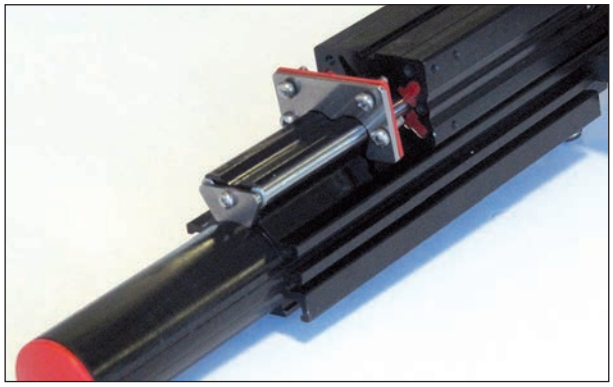

卸下金属防护板。

Remove the protection metal plate.

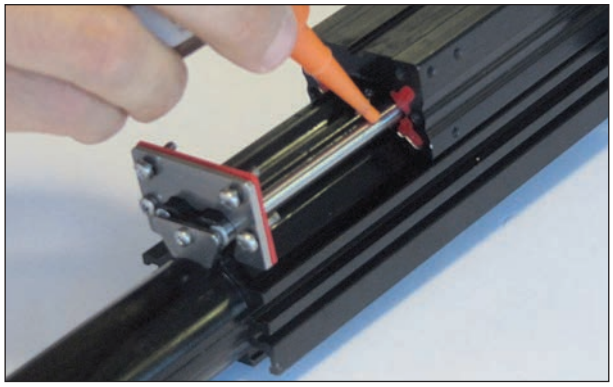

润滑钢筋。

Lubricate the steel bars.

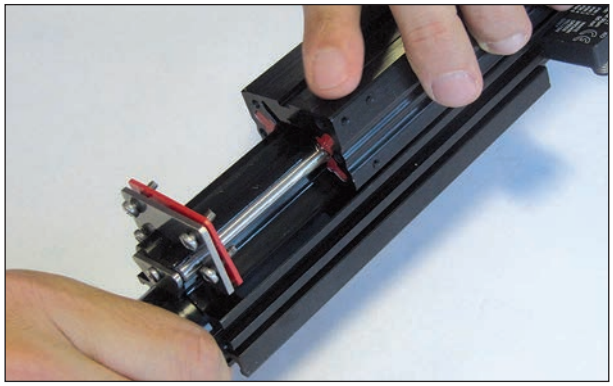

移动轴承座以在球轴承内分配润滑油。

Move the carrier to distribute the lubricant in the ball bearings.

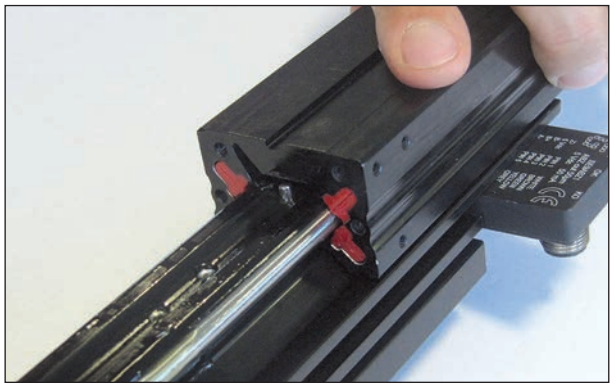

注意将轴承座推出导向器。

Pay attention not to drive the carrier out of the guide.

电动线性导向器

- 集成线性电机。
- 集成编码器传感器。
- 循环球轴承导向系统。
- 200/300/400/500/700/1000 毫米行程。
- T 型螺母安装件。
- M12 标准电气连接。
- 兼容市场上的几种驱动器。
- 可选磁性回位传感器。
- 兼容 LV 电动线性执行器。

Electric linear guides

- *Integrated linear motor.*
- *Integrated encoder sensor.*
- *Recirculating ball-bearing guide system.*
- *200/300/400/500/700/1000 mm strokes.*
- *T-nut mounting.*
- *M12 standard electrical connection.*
- *Compatible with several drives available on the market.*
- *Optional magnetic homing sensors.*
- *Compatible with LV electric linear actuators.*

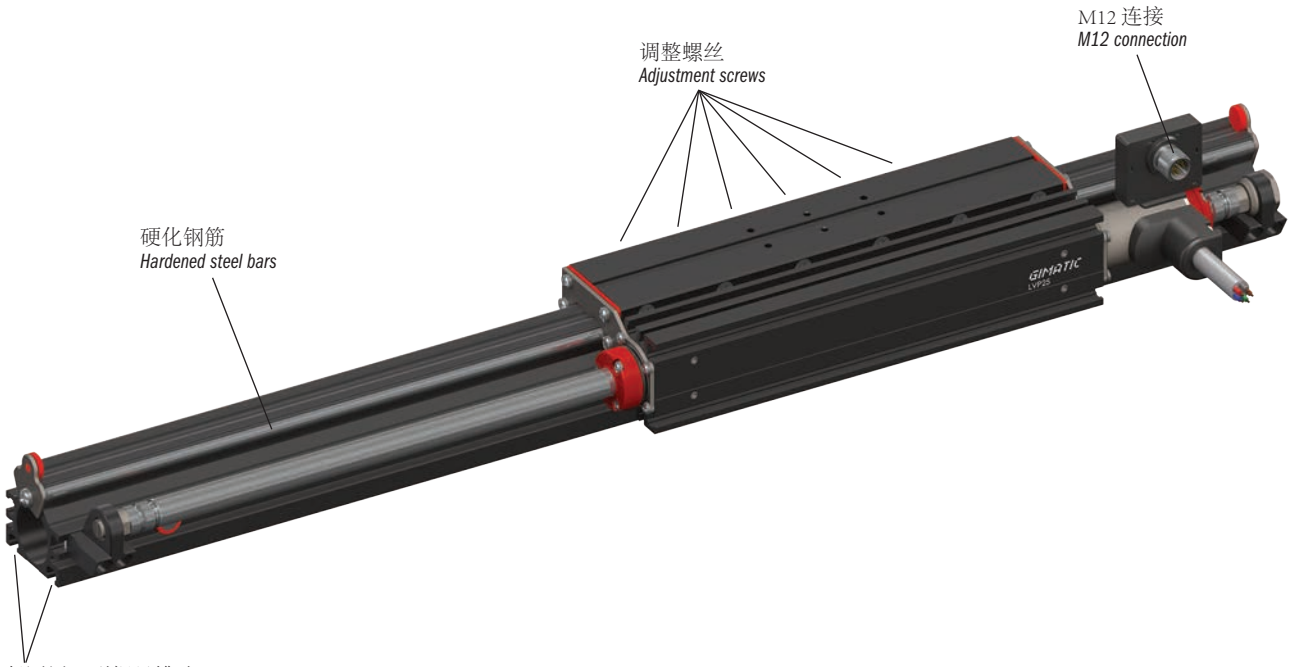

循环球轴承导向器

- 用于较轻重量和散热的挤出铝内结构。
- 插入铝质主体内的硬化钢筋。
- 长寿型轴承。
- 用于零反冲调整的可调整预负载。

Recirculating ball bearing guide

- *Structure in extruded aluminium designed to be lightweight and dissipate heat.*
- *Hardened steel bars inserted in the aluminium body.*
- *Long life bearings.*
- *Adjustable preloading for zero backlash adjustment.*

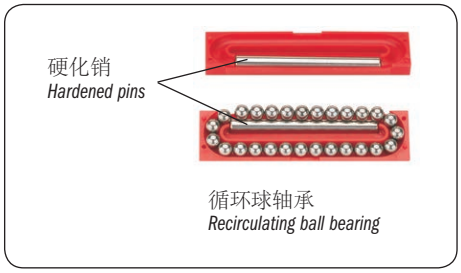

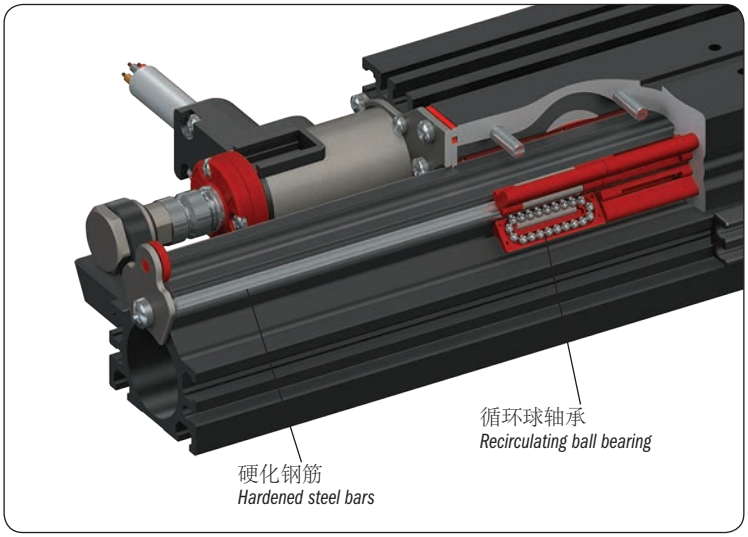

应用示例

带有端口的 X-Y 系统。

Application example

X-Y system with portal.

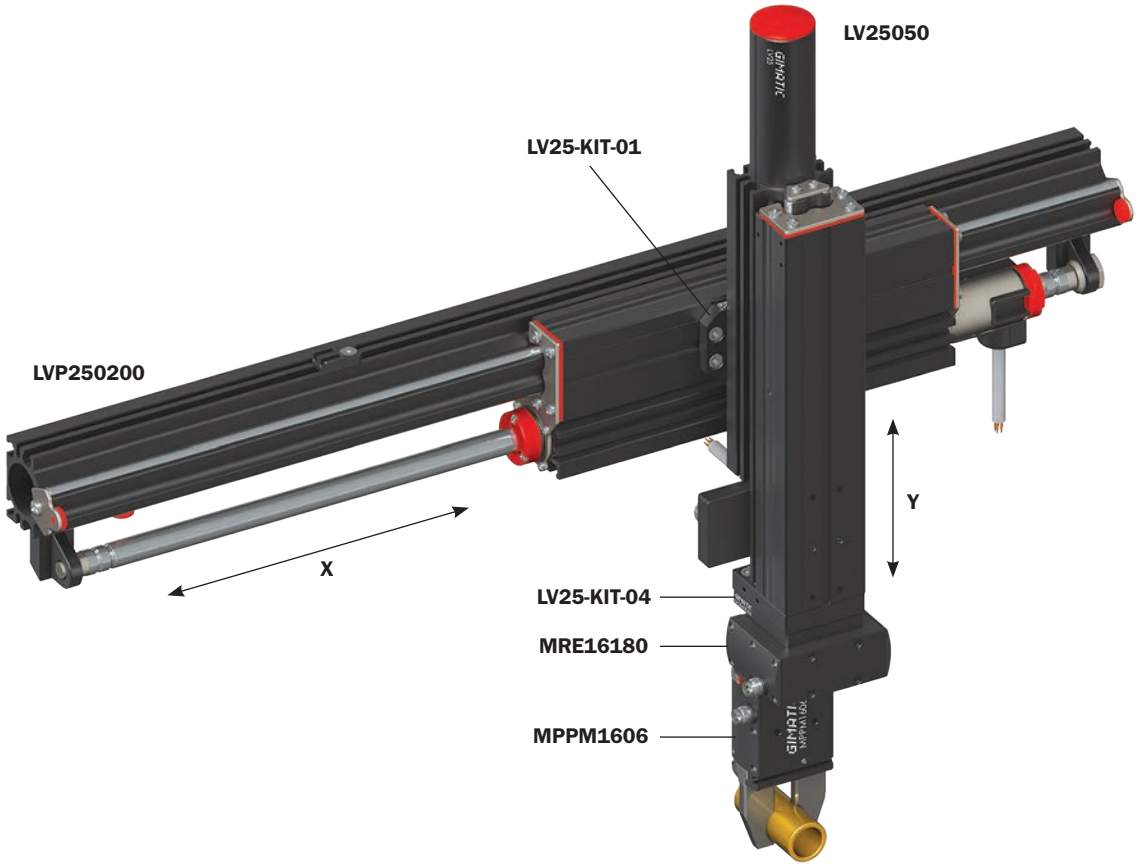

应用示例

带有端口的 X-Y-Z 系统。

Application example

X-Y-Z system with portal.

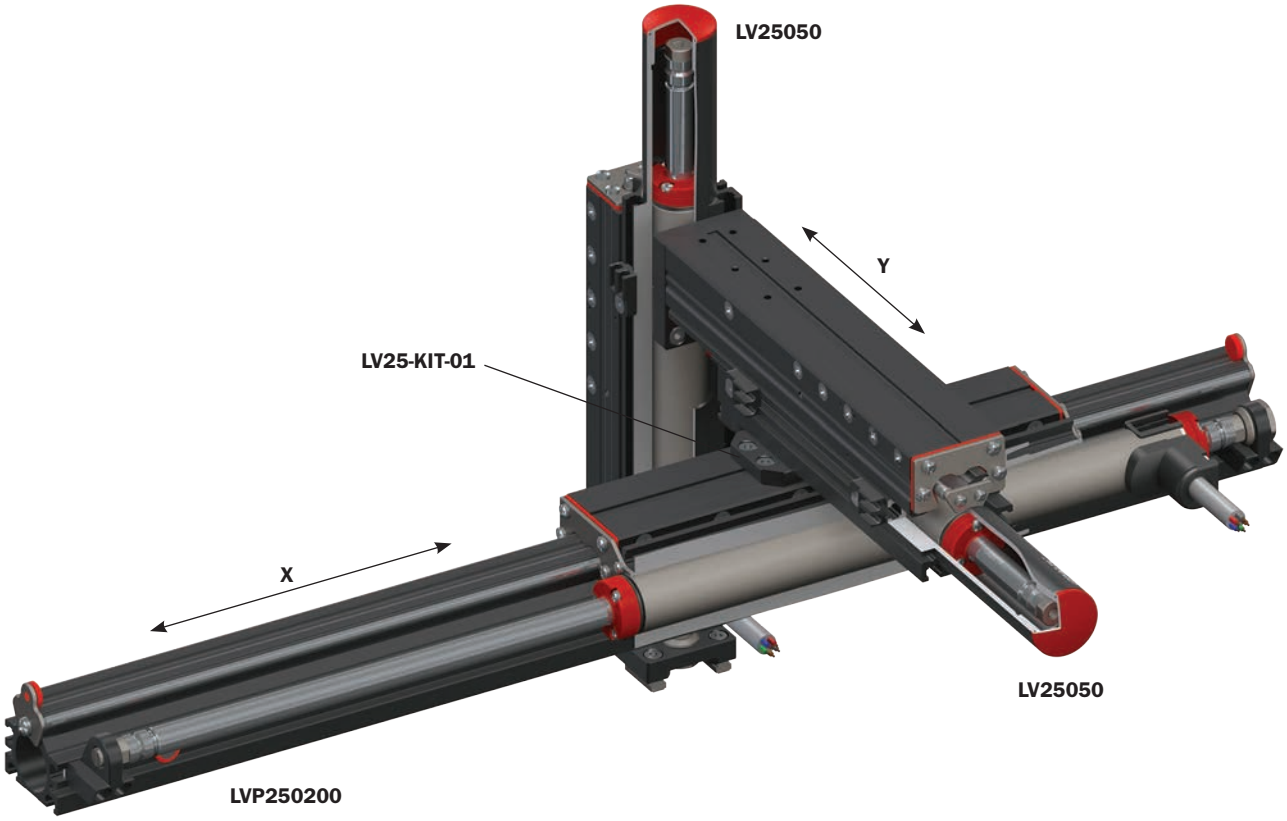

主要特点 *Main features*

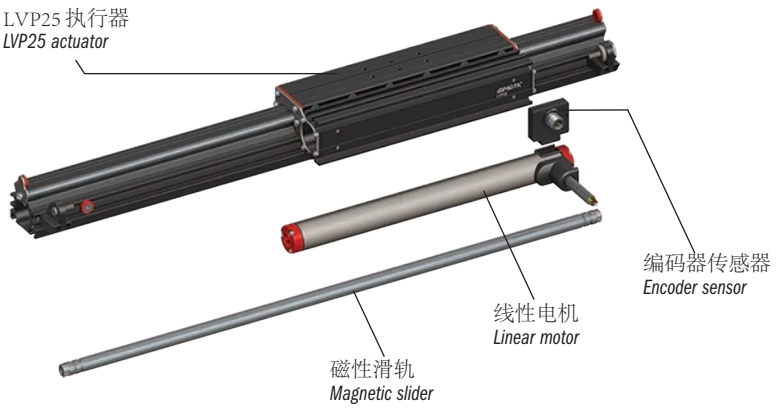

	LVP250200		LVP250300		LVP250400		LVP250500	
行程 *Stroke*	200 mm		300 mm		400 mm		500 mm	
与滑轨为一体的部件质量 *Mass of the parts integral with the slider*	1700 g		2010 g		2300 g		2605 g	
与定子为一体的部件质量 *Mass of the parts integral with the stator*	1030 g							
总质量（包括电机） *Total Mass (motor included)*	2730 g		3040 g		3330 g		3635 g	
订购代码 *Order code*	LVP250200-70	LVP250200-300	LVP250300-70	LVP250300-300	LVP250400-70	LVP250400-300	LVP250500-70	LVP250500-300
线性电机 *Linear motor*	ML2570X6	ML25300X6	ML2570X6	ML25300X6	ML2570X6	ML25300X6	ML2570X6	ML25300X6
总线电压 *BUS voltage*	72 Vdc	325 Vdc	72 Vdc	325 Vdc	72 Vdc	325 Vdc	72 Vdc	325 Vdc
峰值力 *Peak force*	105.4 N	131.6 N	105.4 N	131.6 N	105.4 N	131.6 N	105.4 N	131.6 N
峰值电流 (100°C) *Peak current*	5.2 A	2.1 A	5.2 A	2.1 A	5.2 A	2.1 A	5.2 A	2.1 A
力常数 *Force constant*	20.3 N/A	62.7 N/A	20.3 N/A	62.7 N/A	20.3 N/A	62.7 N/A	20.3 N/A	62.7 N/A
连续力 *Continuous force*	32 N	28 N	32 N	28 N	32 N	28 N	32 N	28 N
连续电流 (100°C) *Continuous current*	1.6 A	0.45 A	1.6 A	0.45 A	1.6 A	0.45 A	1.6 A	0.45 A
热阻 *Thermal resistance*	2.2 °C/W	2.78 °C/W	2.2 °C/W	2.78 °C/W	2.2 °C/W	2.78 °C/W	2.2 °C/W	2.78 °C/W
最高速度 *Maximum speed*	2 m/s							
温度范围 *Temperature range*	5 ÷ 80 °C							
环境防护等级 *Environmental Degree*	IP67							
分辨率 *Resolution*	±25 µm							

主要特点

Main features

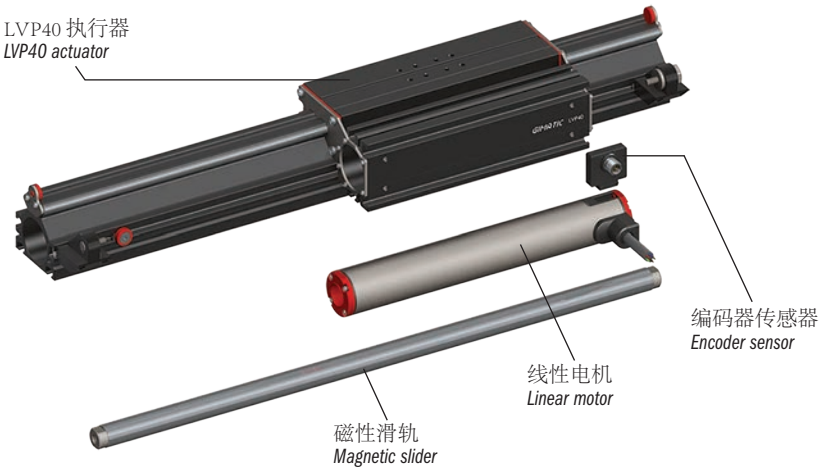

	LVP400200		LVP400300		LVP400500		LVP400700		LVP401000	
行程 *Stroke*	200 mm		300 mm		500 mm		700 mm		1000 mm	
与滑轨为一体的部件质量 *Mass of the parts integral with the slider*	3800 g		4450 g		5660 g		6900 g		8800 g	
与定子为一体的部件质量 *Mass of the parts integral with the stator*	2550 g									
总质量 (包括电机) *Total Mass (motor included)*	6350 g		7000 g		8200 g		9450 g		11350 g	
订购代码 *Order code*	LVP400200-70	LVP400200-300	LVP400300-70	LVP400300-300	LVP400500-70	LVP400500-300	LV400700-70	LV400700-300	LV401000-70	LV401000-300
线性电机 *Linear motor*	ML4070X6	ML40300X6	ML4070X6	ML40300X6	ML4070X6	ML40300X6	ML4070X6	ML40300X6	ML4070X6	ML40300X6
总线电压 *BUS voltage*	72 Vdc	325 Vdc	72 Vdc	325 Vdc	72 Vdc	325 Vdc	72 Vdc	325 Vdc	72 Vdc	325 Vdc
峰值力 *Peak force*	294 N	412 N	294 N	412 N	294 N	412 N	294 N	412 N	294 N	412 N
峰值电流 (100°C) *Peak current*	14.2 A	5.8 A	14.2 A	5.8 A	14.2 A	5.8 A	14.2 A	5.8 A	14.2 A	5.8 A
力常数 *Force constant*	20.7 N/A	71.1 N/A	20.7 N/A	71.1 N/A	20.7 N/A	71.1 N/A	20.7 N/A	71.1 N/A	20.7 N/A	71.1 N/A
连续力 *Continuous force*	68 N	71 N	68 N	71 N	68 N	71 N	68 N	71 N	68 N	71 N
连续电流 (100°C) *Continuous current*	3.3 A	1 A	3.3 A	1 A	3.3 A	1 A	3.3 A	1 A	3.3 A	1 A
热阻 *Thermal resistance*	1.45 °C/W	1.6 C	1.45 °C/W	1.6 C	1.45 °C/W	1.6 C	1.45 °C/W	1.6 C	1.45 °C/W	1.6 C
最高速度 *Maximum speed*	2 m/s									
温度范围 *Temperature range*	5 ÷ 80 °C									
环境防护等级 *Environmental Degree*	IP67									
分辨率 *Resolution*	±25 µm									

LVP250200…

在整个行程中，执行器的峰值力恒定。

LVP250200...

The peak force of the actuator is constant during the whole stroke.

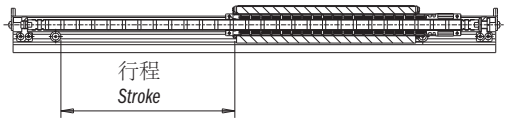

LVP250200-300 (ML25300X6)
LVP250200-70 (ML2570X6)

	力 *Force*	行程 *Stroke*
A	131.6 N	0 mm
B	131.6 N	200 mm
C	105.4 N	0 mm
D	105.4 N	200 mm

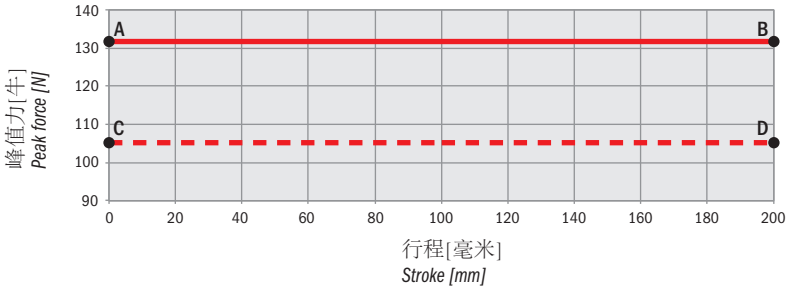

LVP250300…

在整个行程中，执行器的峰值力恒定。

LVP250300...

The peak force of the actuator is constant during the whole stroke.

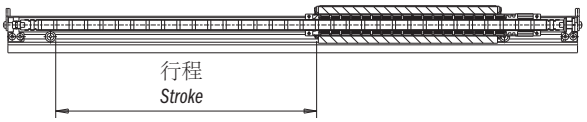

LVP250300-300 (ML25300X6)
LVP250300-70 (ML2570X6)

	力 *Force*	行程 *Stroke*
A	131.6 N	0 mm
B	131.6 N	300 mm
C	105.4 N	0 mm
D	105.4 N	300 mm

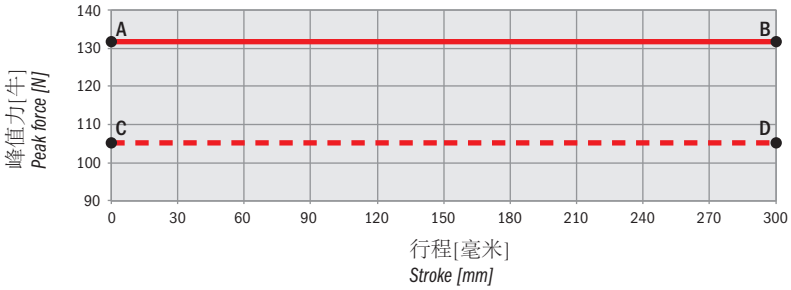

LVP250400…

在整个行程中，执行器的峰值力恒定。

LVP250400...

The peak force of the actuator is constant during the whole stroke.

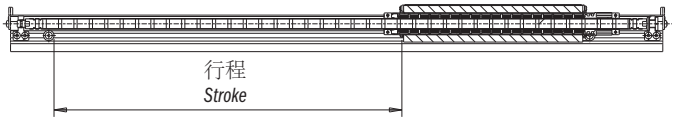

LVP250400-300 (ML25300X6)
LVP250400-70 (ML2570X6)

	力 *Force*	行程 *Stroke*
A	131.6 N	0 mm
B	131.6 N	400 mm
C	105.4 N	0 mm
D	105.4 N	400 mm

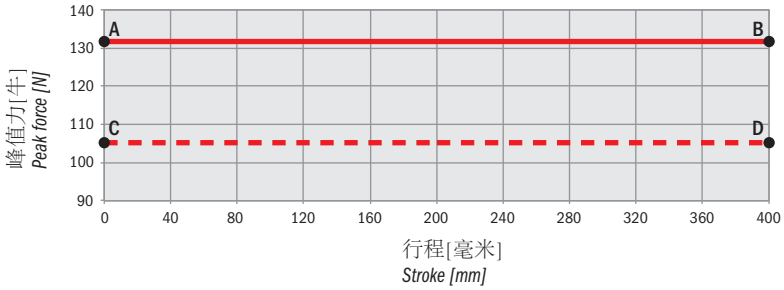

LVP250500…

在整个行程中，执行器的峰值力恒定。

LVP250500...

The peak force of the actuator is constant during the whole stroke.

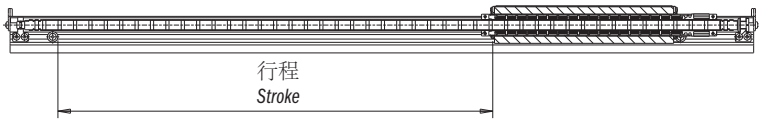

LVP250500-300 (ML25300X6)
LVP250500-70 (ML2570X6)

	力 *Force*	行程 *Stroke*
A	131.6 N	0 mm
B	131.6 N	500 mm
C	105.4 N	0 mm
D	105.4 N	500 mm

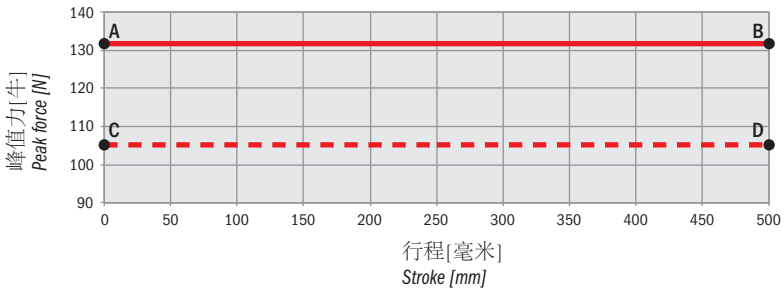

LVP400200…

在整个行程中，执行器的峰值力恒定。

LVP400200...

The peak force of the actuator is constant during the whole stroke.

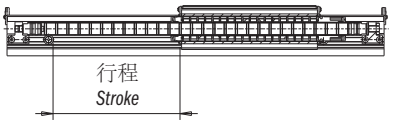

LVP400200-300 (ML40300X6)

LVP400200-70 (ML4070X6)

	力 *Force*	行程 *Stroke*
A	412 N	0 mm
B	412 N	200 mm
C	294 N	0 mm
D	294 N	200 mm

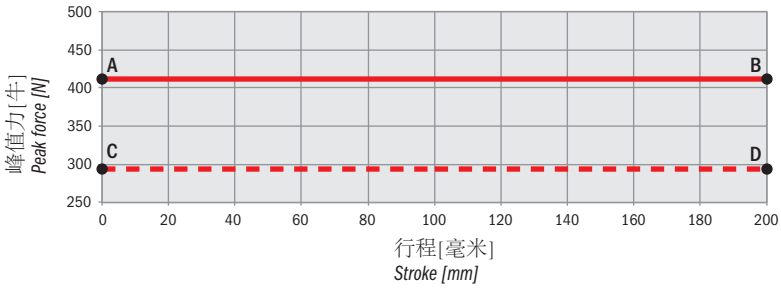

LVP400300…

在整个行程中，执行器的峰值力恒定。

LVP400300...

The peak force of the actuator is constant during the whole stroke.

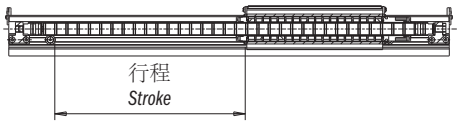

LVP400300-300 (ML40300X6)

LVP400300-70 (ML4070X6)

	力 *Force*	行程 *Stroke*
A	412 N	0 mm
B	412 N	300 mm
C	294 N	0 mm
D	294 N	300 mm

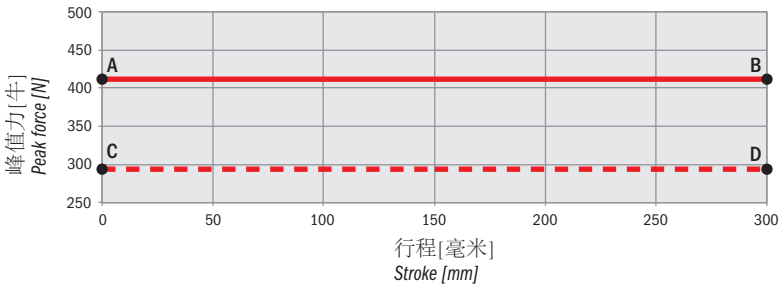

LVP400500…

在整个行程中，执行器的峰值力恒定。

LVP400500...

The peak force of the actuator is constant during the whole stroke.

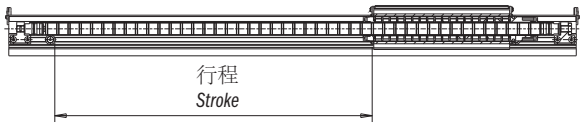

LVP400500-300 (ML40300X6)
LVP400500-70 (ML4070X6)

	力 *Force*	行程 *Stroke*
A	412 N	0 mm
B	412 N	500 mm
C	294 N	0 mm
D	294 N	500 mm

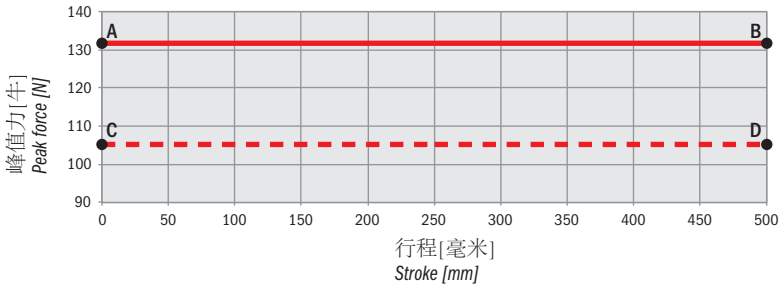

LVP400700…

在整个行程中，执行器的峰值力恒定。

LVP400700...

The peak force of the actuator is constant during the whole stroke.

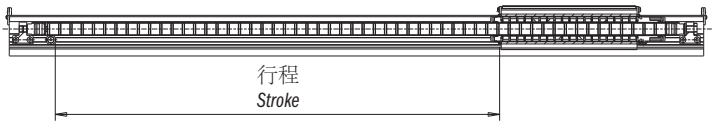

LVP400700-300 (ML40300X6)
LVP400700-70 (ML4070X6)

	力 *Force*	行程 *Stroke*
A	412 N	0 mm
B	412 N	700 mm
C	294 N	0 mm
D	294 N	700 mm

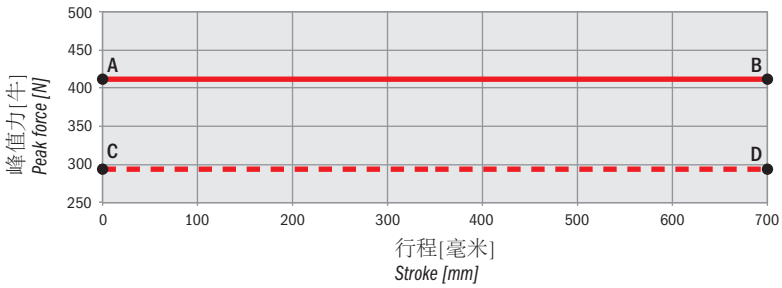

LVP401000…

在整个行程中，执行器的峰值力恒定。

LVP401000...

The peak force of the actuator is constant during the whole stroke.

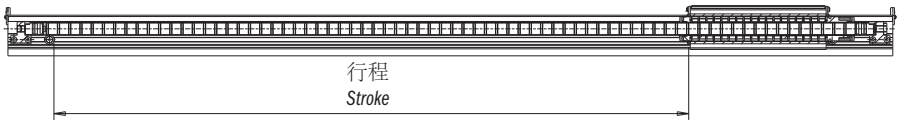

LVP401000-300 (ML40300X6)

LVP401000-70 (ML4070X6)

	力 *Force*	行程 *Stroke*
A	412 N	0 mm
B	412 N	1000 mm
C	294 N	0 mm
D	294 N	1000 mm

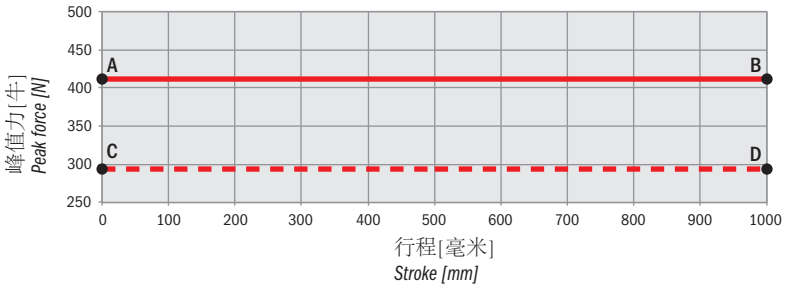

安全负载

负载过大会损坏设备，引起运行问题以及危及操作人员的安全。
检查负载系数 LF 是否低于 1。

Safety loads

Excessive loads can damage the unit, cause operation problems and endanger the safety of the operator.
Check that the load factor LF is lower than 1.

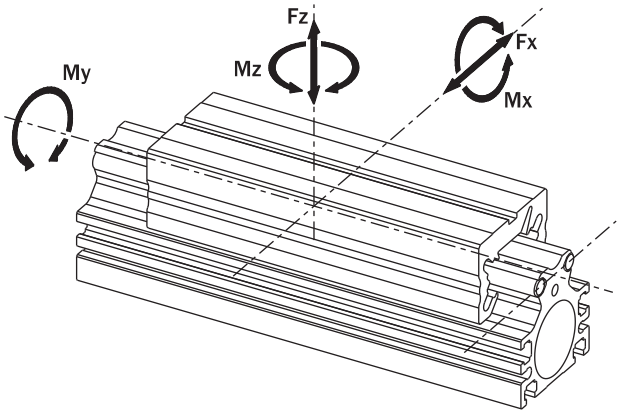

	LVP25	LVP40
Fx	1200 N	2500 N
Fz	1200 N	2500 N
Mx	40 Nm	120 Nm
My	11 Nm	31 Nm
Mz	40 Nm	120 Nm

$$LF = \frac{Fx}{Fx\ max} + \frac{Fz}{Fz\ max} + \frac{Mx}{Mx\ max} + \frac{My}{My\ max} + \frac{Mz}{Mz\ max} \leq 1$$

挤出铝轮廓的惯量

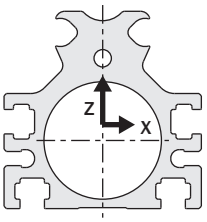

Moments of inertia for the extruded aluminium profile

	LVP25	LVP40
Ix	83479 mm⁴	444096 mm⁴
Iz	100191 mm⁴	450893 mm⁴

润滑

定期检查钢筋并在变干时润滑。
提供 90 克管装的适合润滑脂。
订购代码： GPL500-90。

Lubrication

Periodically check the steel bars and lubricate when dry.
The suitable grease is available in 90 grams tubes.
Ordering code: GPL500-90.

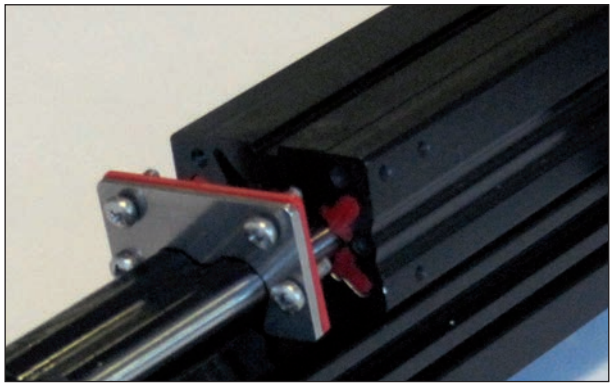

卸下金属防护板。

Remove the protection metal plate.

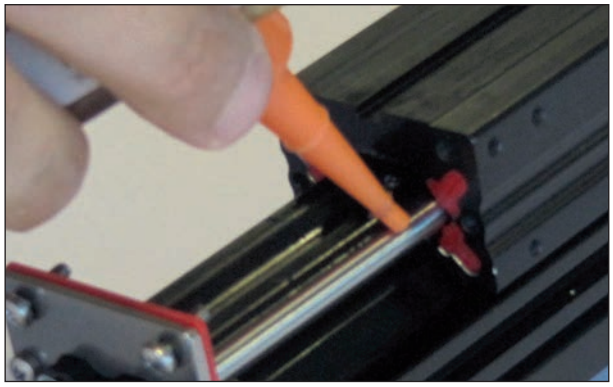

润滑钢筋。

Lubricate the steel bars.

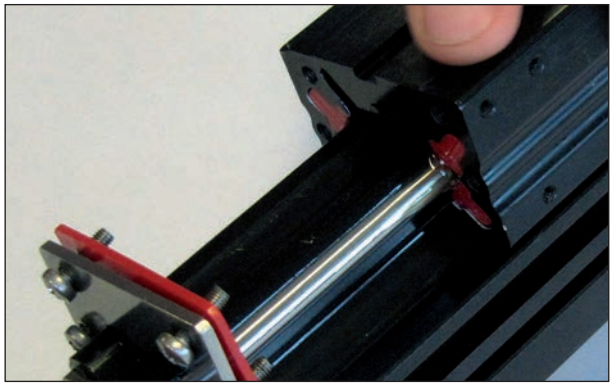

移动轴承座以在球轴承内分配润滑油。

Move the carrier to distribute the lubricant in the ball bearings.

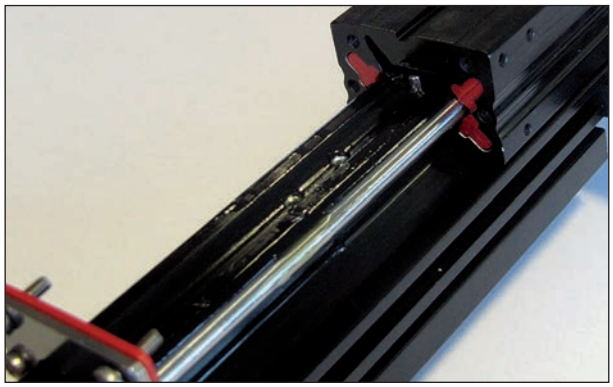

注意将轴承座推出导向器。

Pay attention not to drive the carrier out of the guide.

尺寸（毫米）
Dimensions (mm)

	LVP250200	LVP250300	LVP250400	LVP250500
A	555	655	-	855
B	255	355	-	555

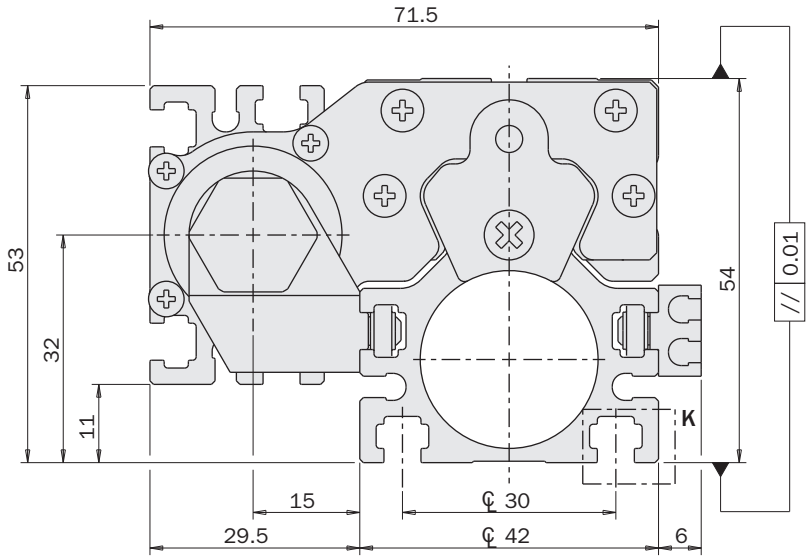

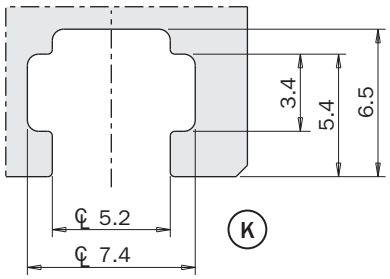

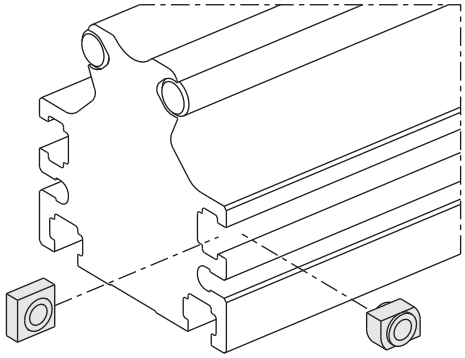

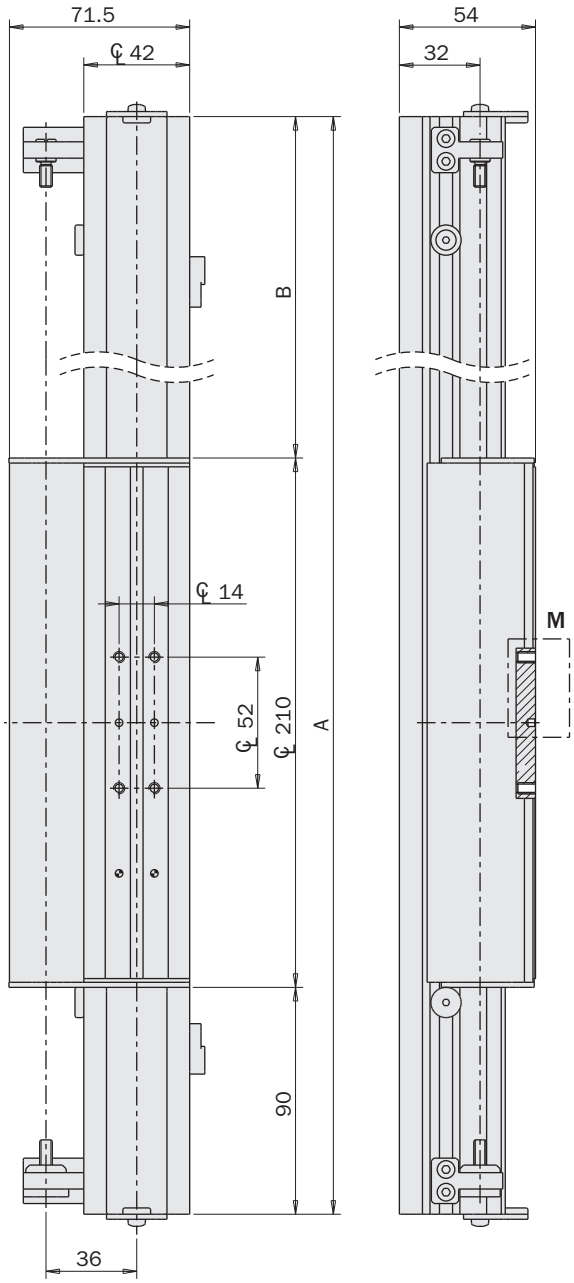

MFM-058

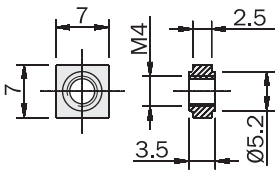

LP23-67

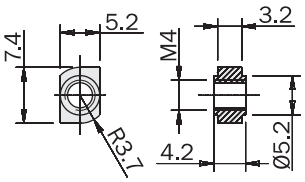

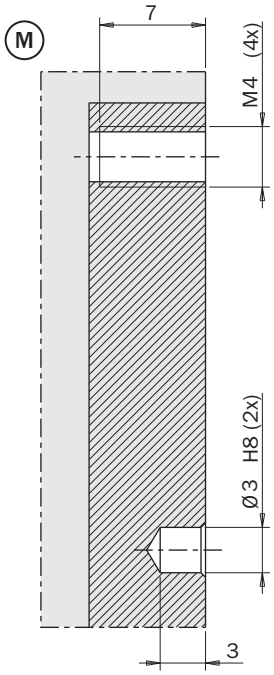

FIRST ANGLE PROJECTION

09/2016

尺寸（毫米）
Dimensions (mm)

	LVP400200	LVP400300	LVP400500	LVP400700	LVP401000
A	594	694	894	1094	1394
B	272.5	372.5	572.5	772.5	1072.5

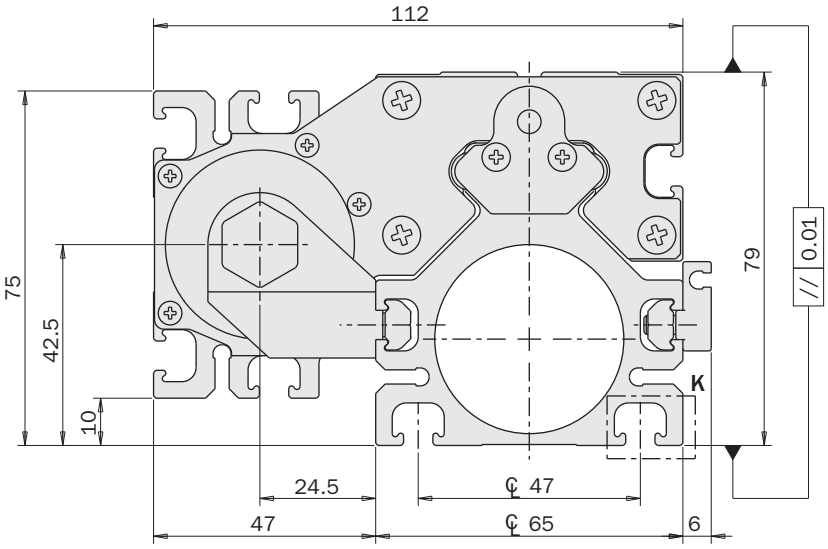

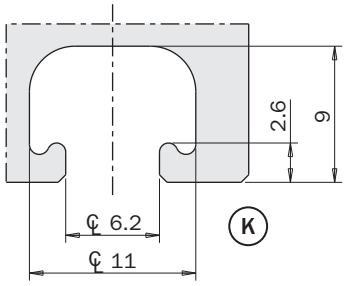

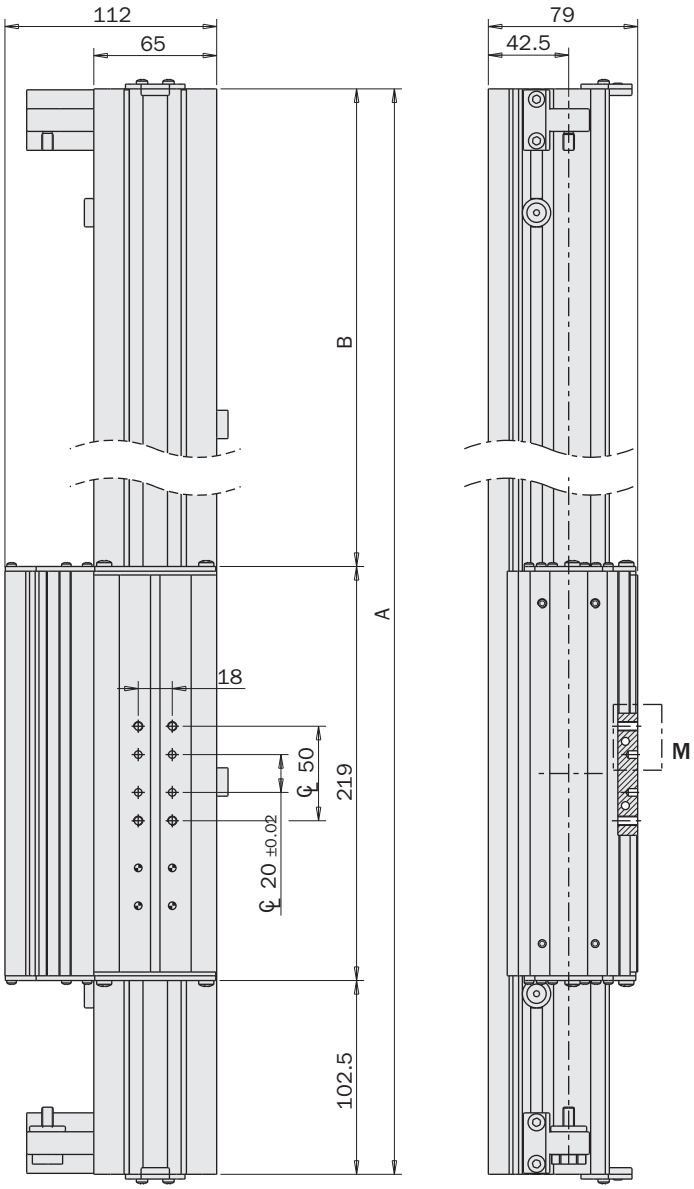

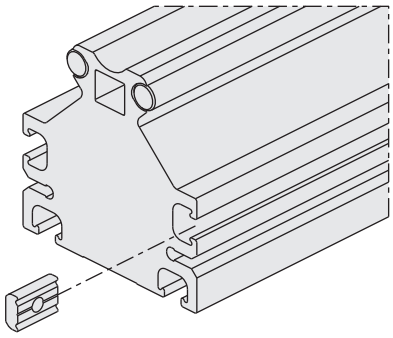

MFI-025

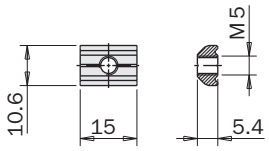

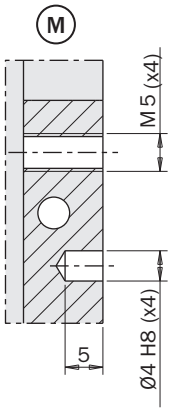

传感器

固定在滑轨轮廓和特殊支架上的磁性接近传感器 (可选) 执行额外行程和零位置检测。

如有需要，可以使用高灵敏度度传感器 (带有 HS 后缀)。

Sensors

Extrastroke and zero position detection is made by magnetic proximity sensors (optional) fixed on the profile of the slide with special brackets.

High-sensitivity sensors (HS suffix) can be used, if necessary.

使用传感器：

Use sensors:

SN4N225-G	PNP	2.5 米线缆 / *2.5m Cable*
SN4M225-G	NPN	2.5 米线缆 / *2.5m Cable*
SN3N203-G	PNP	啮合式 M8 插头连接器 / *Snap M8 plug connector*
SN3M203-G	NPN	啮合式 M8 插头连接器 / *Snap M8 plug connector*
SS4N225-G	PNP	2.5 米线缆 / *2.5m Cable*
SS4M225-G	NPN	2.5 米线缆 / *2.5m Cable*
SS3N203-G	PNP	啮合式 M8 插头连接器 / *Snap M8 plug connector*
SS3M203-G	NPN	啮合式 M8 插头连接器 / *Snap M8 plug connector*

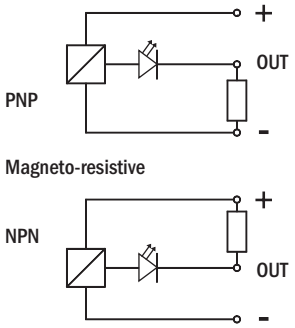

它们均提供了 3 线扁平线缆和一个 LED 灯。

They are all provided with a 3-wire flat cable and a LED.

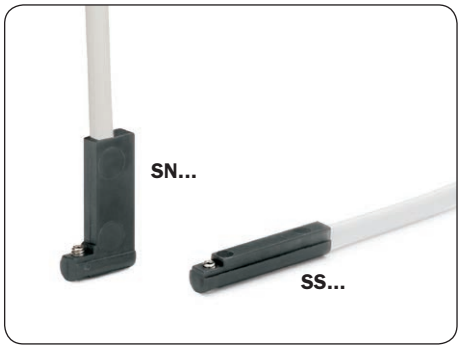

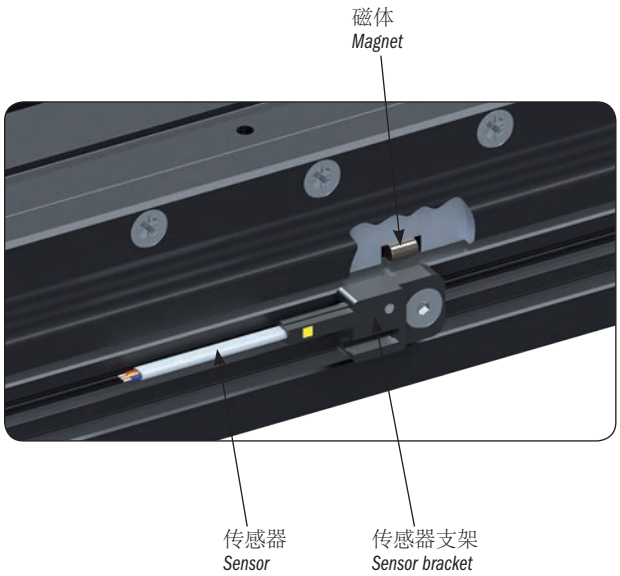

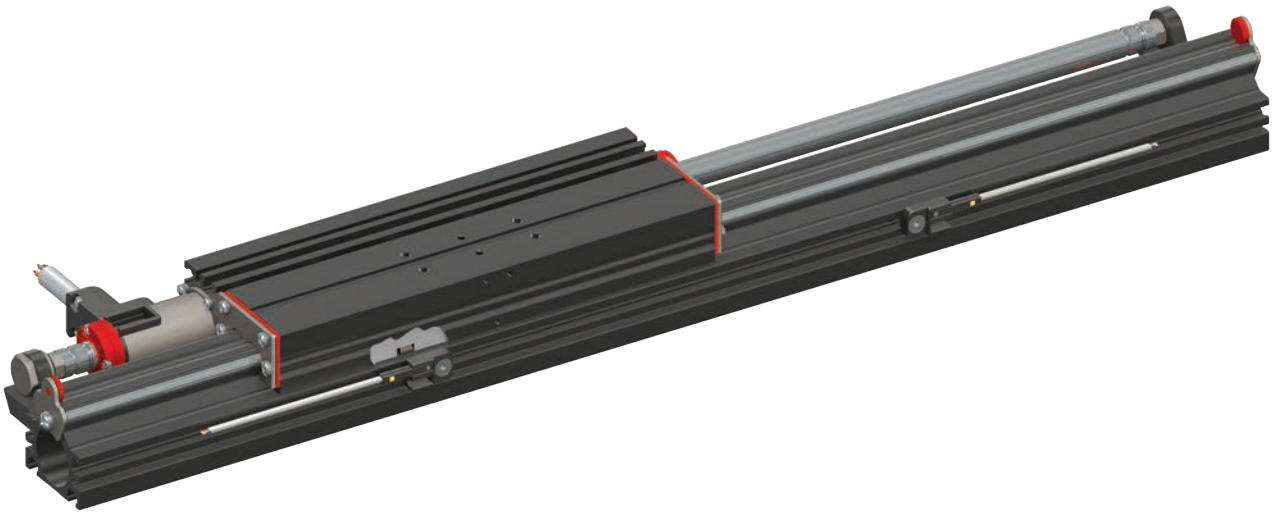

注释
Notes

机电技术

下面的图形显示了抓持器、执行器和电动分度工作台共用的驱动系统的运行状态顺序。

Mechatronic technology

The images below illustrate the operating state sequence of the drive system shared by the grippers, the actuators and the electric indexing tables.

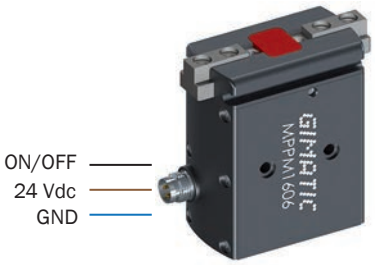

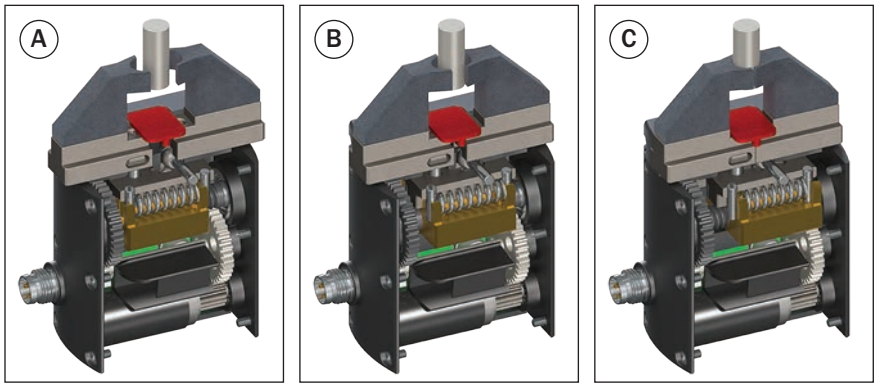

这些状态也可以在电机的功率吸收谱中识别。

These states can also be identified in the motor's power absorption profile.

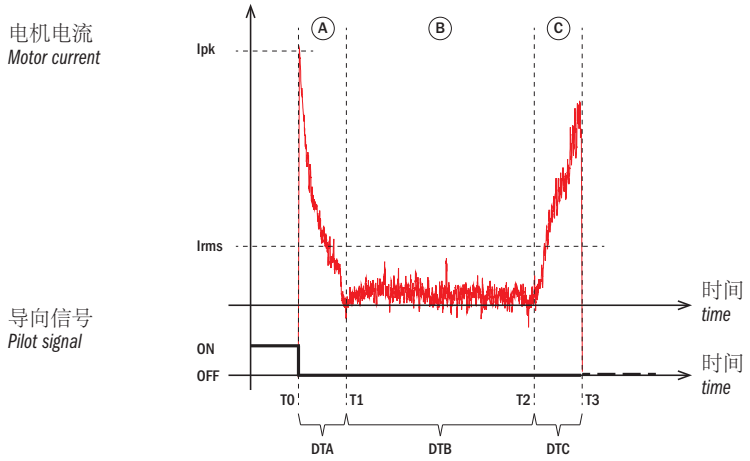

运行描述

在时间T0时，导向信号从开切换到关状态，关闭颚式钳。
在DTA时间期间，电机开始运行；在阶段A期间，这样会造成最初被压缩的弹簧延伸。
在阶段B中，弹簧已经达到其自由长度，颚式钳以恒定速度移动，直至接触时间T2的工件。
在阶段T3时，电机停止运行，即使未供电，不可逆转的传输系统也维持抓持，直至提供下一个颚式钳打开命令（打开状态）。

Operation description

At time T0, the pilot signal switches from ON to OFF status, closing the jaws.
During the DTA time, the motor starts to run; during phase A this causes the extension of the spring, which was initially compressed.
In phase B, the spring has reached its free length and the jaws move at constant speed until they come into contact with the workpiece at time T2.
During phase 3, the jaws are in contact with the workpiece, and compression of the spring starts.
At time T3, the motor stops running and the irreversible transmission system maintains the grip even when not powered up, until the next jaw opening command is given (ON status).

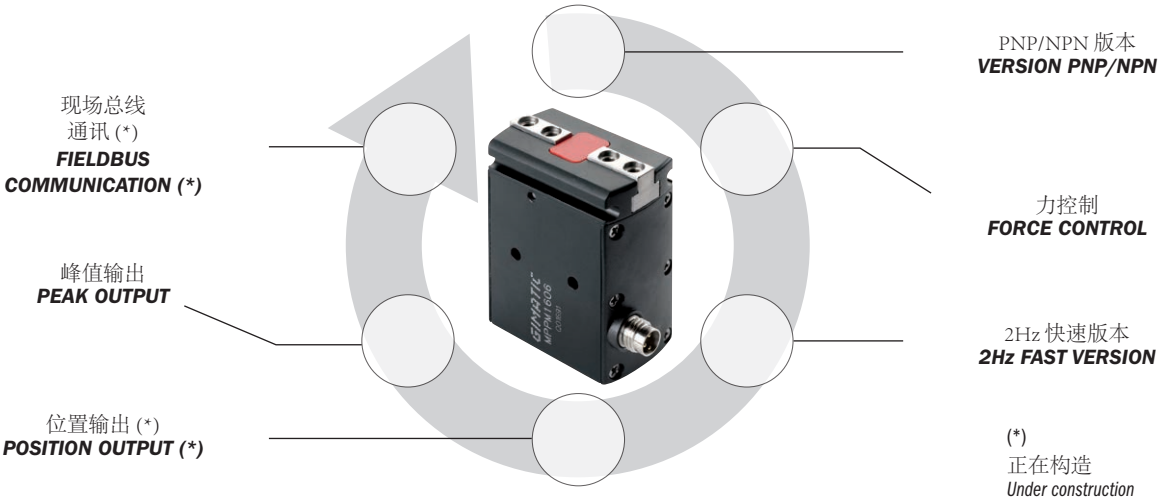

PNP/NPN 版本

PNP输入标准版和NPN 输入 N 版本均配有夹钳

PNP/NPN versions

Grippers are available in the standard version with PNP input and in the N version with NPN input.

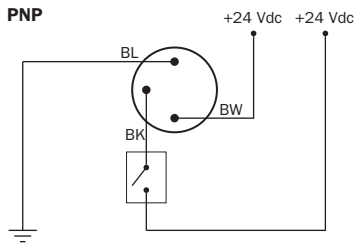

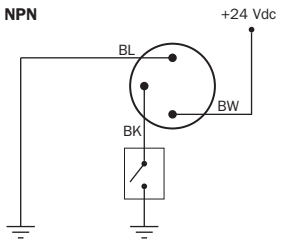

力控制（4 销版本）

4 销 M8 连接器系列的所有型号中, 有的配备了模拟输入端。在 2÷10 V 的范围内更改参考电压, 就可以调整夹持力。电压值低于 2V 就会停止设备运行, 实现设备的安全逻辑性。

Force control (4-pin versions)

In the range of models with 4-pin M8 connector, some versions are available with an analog input channel. By changing the reference voltage in the 2÷10 V range, the gripping force can be adjusted. A voltage value lower than 2 V will inhibit the device operation, allowing the creation of machine safety logics.

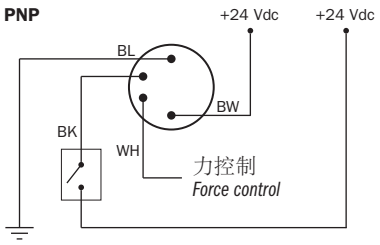

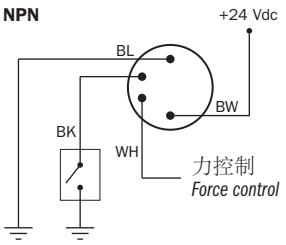

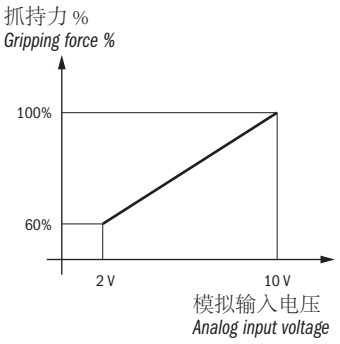

峰值输出

4 销 M8 连接器的所有型号中, 有的配备了数字输出端, 可在钳头释放夹持力时由设备自动启动。
相当于一个集成的距离传感器, 可以在钳头的最后位置进行独立操作, 无需进行调整。

Peak output

In the range of models with 4-pin M8 connector, some versions are available with a digital output channel which is automatically enabled by the device when the jaws exert the gripping force. This will work like an integrated proximity sensor which can operate independently of the final position of the jaws, and therefore with no adjustment.

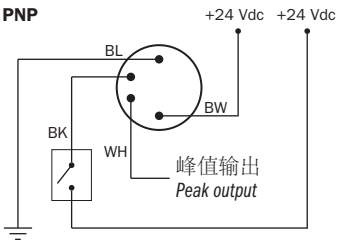

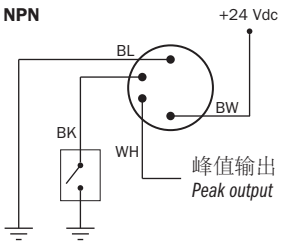

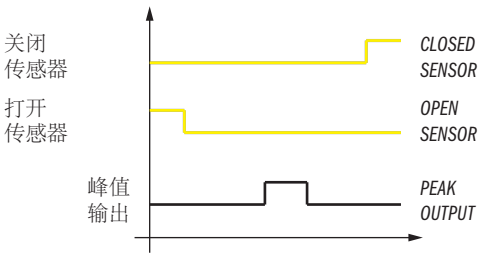

位置输出和现场总线

很快将推出配有输出端、专用于钳头位置测量的版本 (数字和/或模拟) 以及基于数字现场总线的通信版本。

Position output and fieldbus

Versions with an output channel (digital and/or analog) dedicated to jaw position measurement will soon be available, as well as versions set for communication based on digital fieldbus.

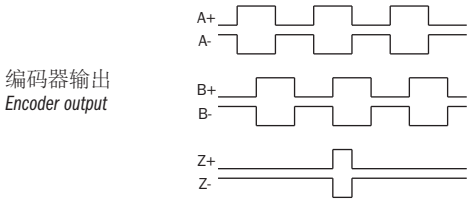

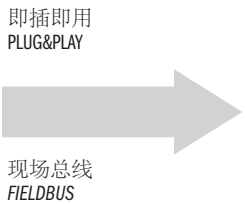

SS/SN 磁性传感器

MTRE 旋转分度工作台和电动抓持器（MPRM 径向电动抓持器除外）依赖一个或多个磁性接近传感器通过置于颚式钳内的磁体检测工作位置。
在大量铁磁材料或强磁场附近避免使用磁性接近传感器，因为会引起检测问题。
标准传感器包括带有 PNP 或 NPN 输出的 SS 和 SN 型号，均配有 3 导线扁平线缆和 LED 灯。
如有需要，提供高灵敏度传感器（带有 HS 后缀）。

SS/SN magnetic sensors

MTRE rotary indexing tables and electric grippers (except the MPRM radial electric gripper) rely on one or more magnetic proximity sensors to detect the work position through magnets placed in the jaws.
The use of magnetic proximity sensors is to be avoided in the vicinity of large masses of ferromagnetic material or intense magnetic fields as this may cause detection problems.
Standard sensors include models SS and SN with PNP or NPN output, all with a 3-wire flat cable and a LED.
In case of necessity, high-sensitivity sensors (with the HS suffix) are available.

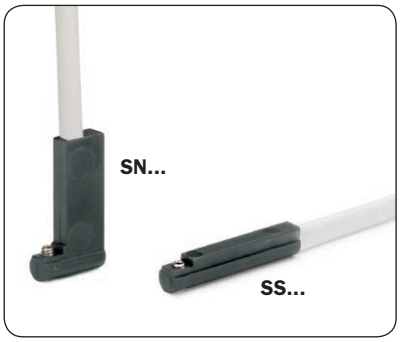

SN4N225-G	PNP	2.5 米线缆 / *2.5 m Cable*
SN4M225-G	NPN	2.5 米线缆 / *2.5 m Cable*
SN3N203-G	PNP	M8 连接器 / *M8 connector*
SN3M203-G	NPN	M8 连接器 / *M8 connector*
SS4N225-G	PNP	2.5 米线缆 / *2.5 m Cable*
SS4M225-G	NPN	2.5 米线缆 / *2.5 m Cable*
SS3N203-G	PNP	M8 连接器 / *M8 connector*
SS3M203-G	NPN	M8 连接器 / *M8 connector*

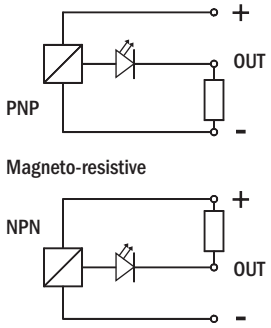

应用示例

Application examples

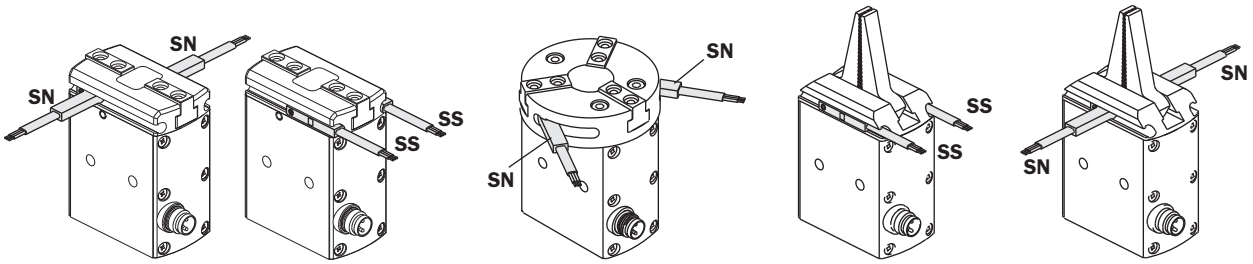

SN 模拟传感器

在电动抓持器中，一个带有模拟输出的 SN 磁性传感器可以检测颚式钳的确切位置。
在大量铁磁材料或强磁场附近避免使用磁性接近传感器，因为会引起检测问题。
如有需要，提供高灵敏度传感器（带有 HS 后缀）。

SN Analog sensor

In the electric grippers the exact jaw position can be detected by one SN magnetic sensor with analog output.
The use of magnetic proximity sensors is to be avoided in the vicinity of large masses of ferromagnetic material or intense magnetic fields as this may cause detection problems.
In case of necessity, high-sensitivity sensors (with the HS suffix) are available.

线缆输出 M8 连接器 *Cable output M8 connector*	SN4V225-G	SN3V203-G
磁性范围 *Magnetic Range*	10÷70 Gauss	
电源 *Power Supply*	12÷30 Vdc	
输出电压 *Output Voltage*	0÷10 Vdc (+/- 10%)	

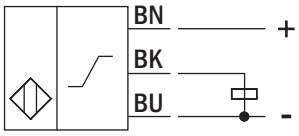

应用示例

Application example

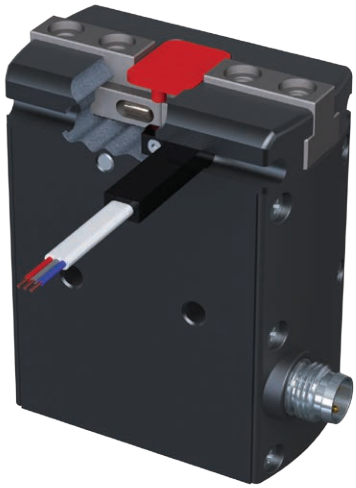

SI 电感式传感器

MRE 旋转式执行器和 MPRM 径向电动抓持器依赖一个或多外电感式接近传感器通过限位开关组或有形螺母检测工作位置。
产品配备安装传感器所需的任何支撑件。
标准传感器为 Ø4 毫米外径 SI 型号，配有 PNP 或 NPN 输出以及 LED 灯。

SI inductive sensors

MRE rotary actuators and MPRM radial electric grippers rely on one or more inductive proximity sensors to detect the work position through a limit switch block or a shaped nut.
Any supports necessary for mounting the sensors are supplied with the product.
The standard sensor is the SI model with Ø4 mm outer diameter, available with PNP or NPN output and a LED.

SI4M225-G	NPN	2.5 米线缆 / *2.5 m Cable*
SI4N225-G	PNP	2.5 米线缆 / *2.5 m Cable*

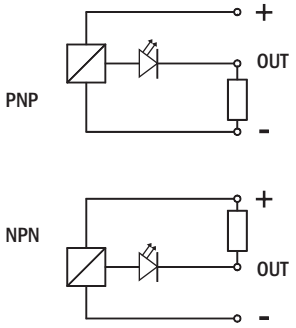

应用示例

Application example

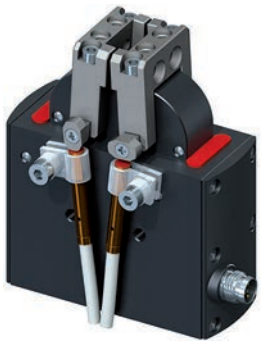

线性电机转换器

ML25 和 ML40 线性电机的最新一代伺服执行器，用于 72 伏 (DRV070) 和 325 伏 (DRV300) 最高总线电压。

Converters for linear motors

Latest generation servo-actuators for linear motors ML25 and ML40, for maximum BUS voltages of 72 V (DRV070) and 325 V (DRV300).

	DRV070IN100IP200	DRV300IN040IP080
施加电压 *Applied Voltage*	60 Vdc	230 VAC 1ph - 3Ph
最低/最高电源 *Min/Max power supply*	20÷80VDC	200÷230VAC / -15% +10%, 50/60Hz
额定电流 *Rated current*	10	4
2” 峰值电流 *Peak current for 2”*	20	8
逻辑电源 *Logic power supply*	+24VDC ±20%	
反馈（5 伏） *Feedback (5V)*	霍尔传感器 – 递增，包含5 伏线性驱动器，配备/未配霍尔传感器 – 绝对，包含SSI – 无传感器 *Hall Sensors - Incremental Enc. 5V Line Driver with/without Hall sensors - Absolute Enc. SSI - Sensorless*	
现场总线 *Fieldbus*	Modbus RTU - CanOpen DS402 (EtherCat COE - ProfiBus - ProfiNet)	Modbus RTU - CanOpen DS402
模拟主参考 *Analogue main reference*	±10 伏微分速度和扭矩（10 位） *±10V differential speed and torque 10Bit*	±10 伏微分速度和扭矩（10 位） *±10V differential speed and torque (10Bit)*
脉冲系列 *Pulse train*	脉冲/方向 – 5 伏线性驱动器通道 A/B – 顺时针/逆时针（2 兆赫） *Pulse/Direction - 5V Line Driver channels A/B - CW/CCW (2MHz)*	
数字输入和输出 *Digital Inputs and Outputs*	6 输入 PNP - 2 输出 NPN/PNP *6 input PNP - 2 outputs NPN/PNP*	6 输入 PNP - 3 输出 NPN/PNP *6 ingressi PNP - 3 uscite NPN/PNP*
控制模式 *Control modes*	速度 - 可调整斜坡 - 扭矩控制 - 多定位器 - 电子齿轮箱 *Speed - Adjustable ramps - Torque control - multipositioner - Electronic gearbox*	
驱动器设置 *Drive Setting*	通过软件 CALIPER 经由 RS232 串行端口 *Through software CALIPER via RS232 Serial port*	

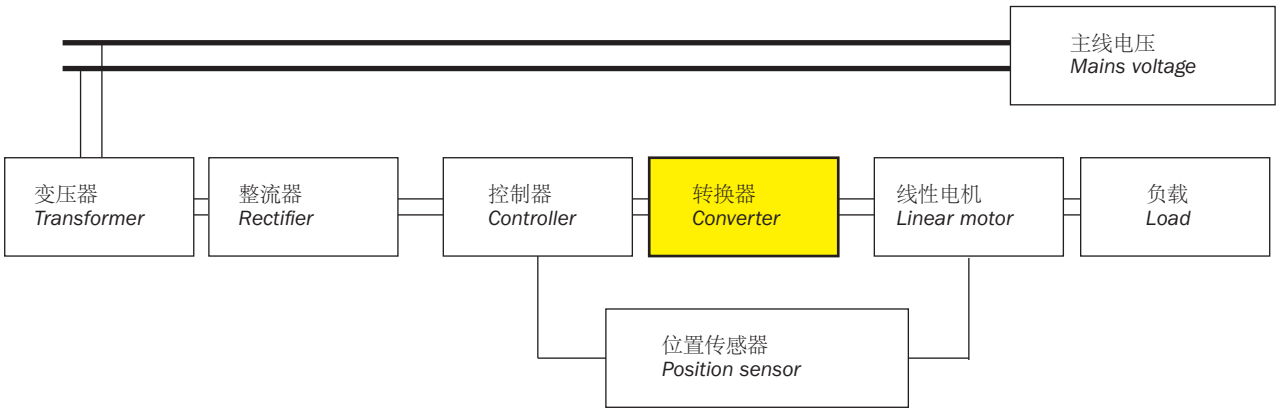

线性电机的外部位置变送器

在标准 SE 系列变送器（SE9ABZ1 和 SE9ABZ1-HR）不能满足所需的精确度要求或动力的 LV 滑轨和 LVP 线性导向器应用中，可以采用外部线性位置变送器。
这种变送器具有一个主动读取头 (SEXT20SIN020)，组合有不干胶磁条 (SEXT20BAND015)，可以定位在 LV 滑轨和 LVP 导向器的侧部。
读取头可以用支架 LV25-KIT-05 固定到 LV 滑轨上，用支架 LV25-KIT-15 固定到 LVP 线性导向器上。

External position transducer for linear motors

In LV slide and LVP linear guide applications, where the standard SE series transducers (SE9ABZ1 and SE9ABZ1-HR) do not meet the accuracy requirements or dynamics needed, external linear position transducers can be employed.
This type of transducer has an active reading head (SEXT20SIN020) combined with an adhesive magnetic strip (SEXT20BAND015) that can be positioned on the sides of the LV slides and LVP guides.
The reading head can be fixed to the LV slides using brackets LV25-KIT-05 and to the LVP linear guides using brackets LV25-KIT-15.

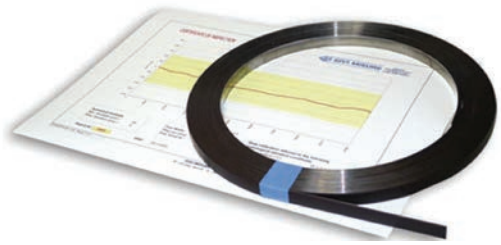

	SEXT20SIN020
极距 *Pole pitch*	2+2 mm
精确度等级 *Accuracy class*	±15 µm
传感器和磁条之间的距离 *Distance between sensor and magnetic stripe*	0.3 ÷ 1.5 mm
参考指数 *Reference indexes*	恒定距离（2 毫米） *constant pitch (2 mm)*
重复性 *Repeatability*	±1 增量 *±1 increment*
输出信号 *Output signals*	正弦 1 Vpp *sinusoidal 1 Vpp*
电源 *Power supply*	5 ÷ 28 Vdc ±5%
最高频率 Maximum frequency	6 kHz
最高横向速度 *Maximum traverse speed*	12 m/s
防护等级 *Protection rating*	IP 67

	SEXT20BAND015
极距 *Pole pitch*	2+2 mm
精确度等级 *Accuracy class*	±15 µm
宽度 *Width*	10 mm
厚度 *Thickness*	1.3 mm
长度 *Length*	1.5 m
最小弯曲半径 *Minimum bending radius*	80 mm
盖 *Cover*	不干胶钢盖 *adhesive steel cover*

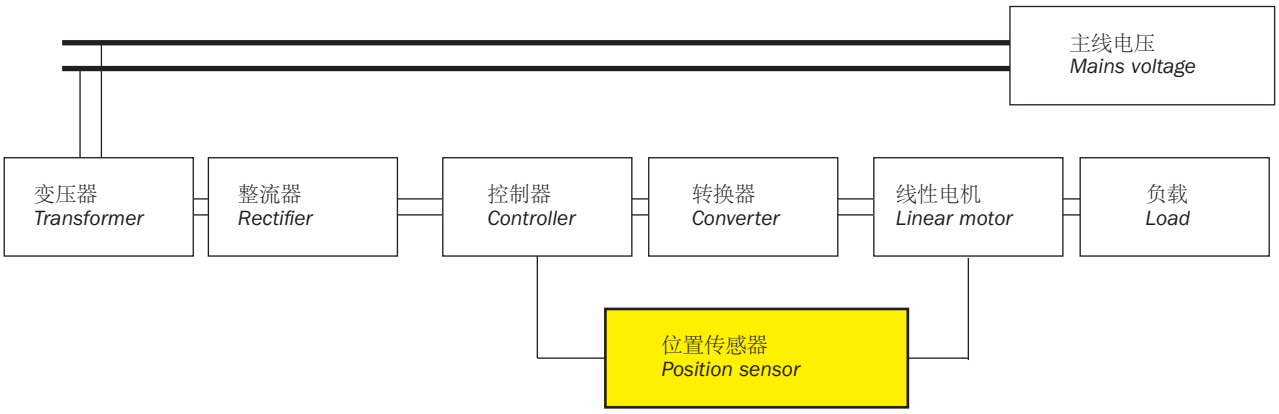

安装支架

LV25-KIT-05

- 质量： 64克

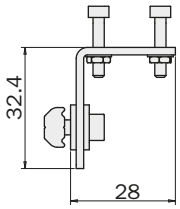

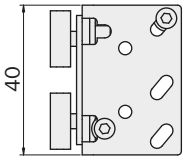

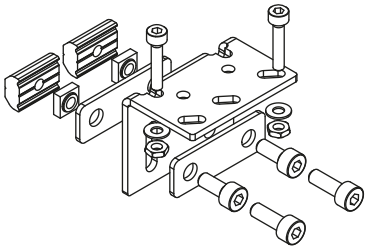

Mounting bracket

LV25-KIT-05

- *Weight: 64 g*

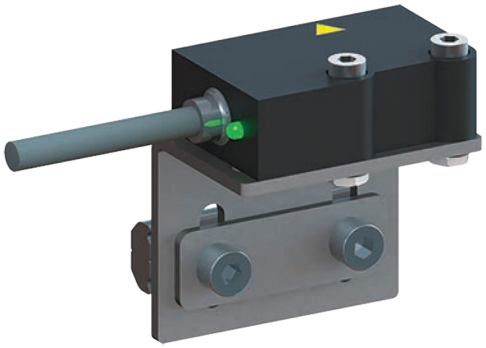

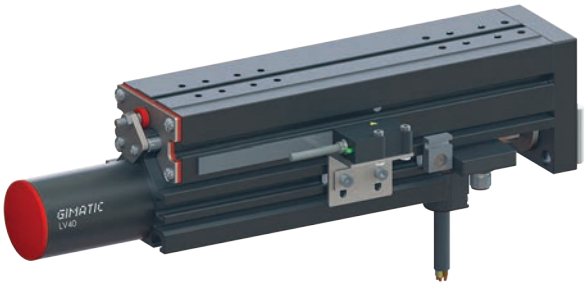

安装支架

LV25-KIT-15

- 质量： 62 克

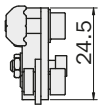

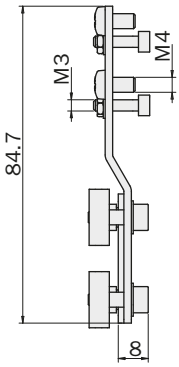

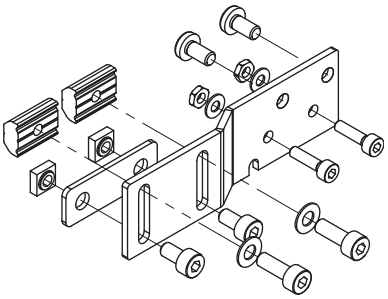

Mounting bracket

LV25-KIT-15

- *Weight: 62 g*

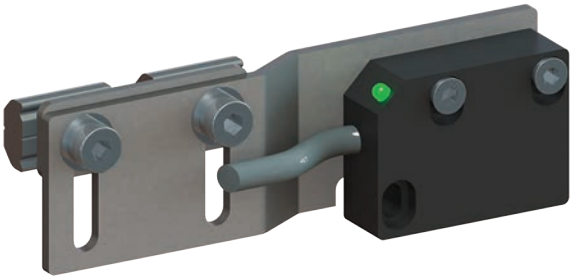

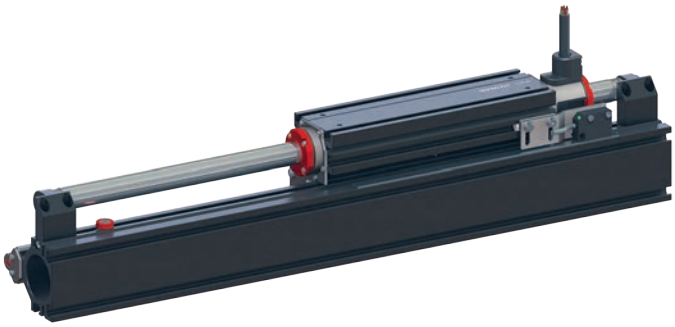

电动抓持器和执行器的线缆和连接器

可以通过带有挠性线缆的轴向和角形连接器连接电动抓持器和旋转执行器以用于移动应用。

Cables and connectors for electric grippers and actuators

Electric grippers and rotary actuators can be connected by means of axial and angular connectors with flexible cables for moving applications.

0° 轴向	CFGM800325P	CFGM800425P	*0° axial*
90° 角形	CFGM890325P	CFGM890425P	*90° angular*
应用	抓持器 / *Gripper*	抓持器 / *Gripper*	*Application*
接触器类型	阴性 / *Female*		*Contact type*
接触器数量	3	4	*Number of contacts*
标准长度	2.5 m		*Standard length*
材料	裸铜 / *Bare Copper*		*Material*
股数	32 x 0.10 mm	32 x 0.9 mm	*Stranding*
横截面积 – AWG	0.25 mm² / 24	0.34 mm² / 24	*Cross-section - AWG*
导体直径	Ø 1.25 mm	Ø 1.3 mm	*Conductor diameter*
导体化合物	TPO		*Conductor compound*
线缆直径	Ø 4.1 mm ±0.25 mm	5 mm	*Cable diameter*
线缆材料	PUR		*Cable material*
外部颜色	RAL 9005		*Exterior colour*
特征	Oil, Hydraulic fluide and UV resistant, Silicone, Pb, Cd, Hg, FCKW and Halogen free		*Characteristics*
最小弯曲半径	41 mm		*Min. bending radius*
参考标准	EN 50363-10-2, IEC 60754-1, UL/CSA style 21576		*Reference standards*
颜色布局	1 棕色 / *Brown* 3 蓝色 / *Blue* 4 黑色 / *Black*	1 棕色 / *Brown* 2 白色 / *White* 3 蓝色 / *Blue* 4 黑色 / *Black*	*Colour layout*
	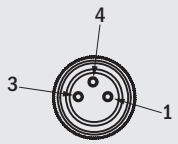	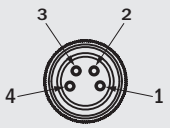	

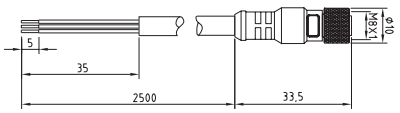

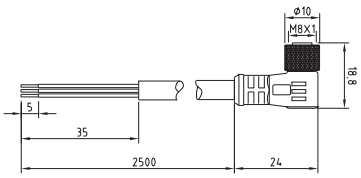

THE INTERNAL CORE POSITION IS NOT STANDARD

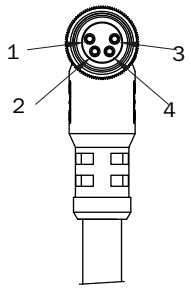

用于 SE 传感器和变送器的线缆和连接器

可以通过配有挠性线缆的轴向和角形连接器连接变送器和反馈传感器以用于移动应用。

Cables and connectors for SE sensors and transducers

Transducers and feedback sensors can be connected by means of axial and angular connectors with flexible cables for moving applications.

0° 轴向	CFGM1200825P	*0° axial*
90° 角形	CFGM1290825P	*90° angular*
应用	编码器 / *Encoder*	*Application*
接触器类型	阴性 / *Female*	*Contact type*
接触器数量	8	*Number of contacts*
标准长度	2.5 m	*Standard length*
材料		*Material*
股数	32 x 0.10 mm	*Stranding*
横截面积 – AWG	0.25 mm² / 24	*Cross-section - AWG*
电阻	< 76.33 Ω/km	*Electrical resistance*
导体直径	Ø 1.15 mm	*Conductor diameter*
导体化合物	PP	*Conductor compound*
屏蔽	全屏蔽 / *Fully shielded*	*Shield*
屏蔽类型	编织物 / *Braid*	*Shield type*
线缆直径	Ø 6.3 mm ±0.2 mm	*Cable diameter*
线缆材料	PUR	*Cable material*
外部颜色	RAL 9005	*Exterior colour*
特征	Oil, Hydraulic fluide and UV resistant, Silicone, Pb, Cd, Hg, FCKW and Halogen free	*Characteristics*
最小弯曲半径	63 mm	*Min. bending radius*
参考标准	2002/95/CE, EN 50363-10-2, IEC 60344	*Reference standards*
质量	175g	*Weight*
颜色布局	1 白色 / *White* 3 棕色 / *Brown* 4 绿色 / *Green* 4 黄色 / *Yellow* 5 灰色 / *Gray* 6 粉红 / *Pink* 7 蓝色 / *Blue* 8 红色 / *Red* 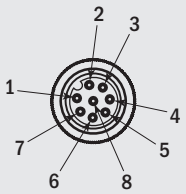	*Colour layout*

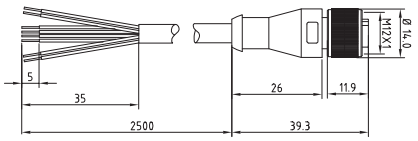

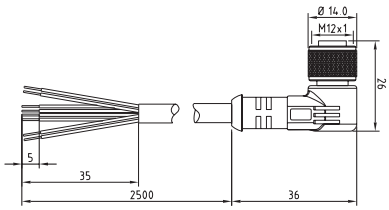

可现场接线连接器

提供配有 300 毫米标准线缆插座的 ML 线性电机、LV 和 LVP 执行器。
可以通过标准 EN175000 阳性和阴性连接器（7 针脚）连接 70 伏总线电压型号的功率信号。

Field-wireable connectors

ML linear motors, LV and LVP actuators are supplied with 300 mm standard cable outlet.
Power signals for models with BUS voltage of 70 V can be connected through standard EN175000 male and female connectors (7 pin).

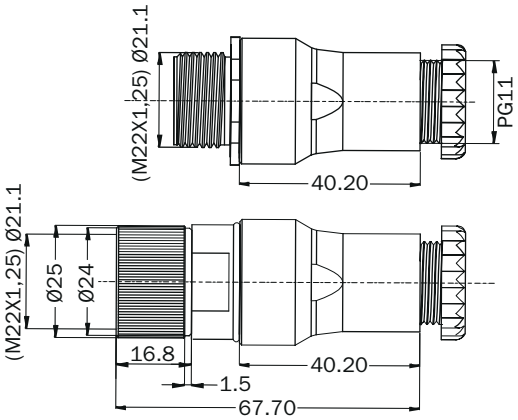

	CFGM2200700	CMGM2200700
连接器类型 *Connector type*	ENI75000 (DIN43563)	
接触器数量 *Number of contacts*	7 极 *7-poles*	
导体横截面积 *Conductor cross-section*	max 1.5 mm²	
外罩颜色 *Housing colour*	黑色 *black*	
额定电压 *Rated voltage*	60 VAC / 175 VDC	
额定电压 *Rated voltage*	*9 A*	
接触器材料 *Contact material*	黄铜 *Brass*	
接触器表面材料 *Contact surface material*	镀金 *Gold plated*	
外罩材料 *Housing material*	尼龙 6 + 30% 纤维玻璃 *Nylon 6 + 30% fiber glass*	
耦合螺母材料 *Coupling nut material*	CuZnNi	
O 型环 *O-Ring*	NBR	
防护等级 (IEC 60529) *Protection rating (IEC 60529)*	IP65	
温度范围 *Temperature range*	-40°C ÷ +100°C	
质量 *Weight*	55g	

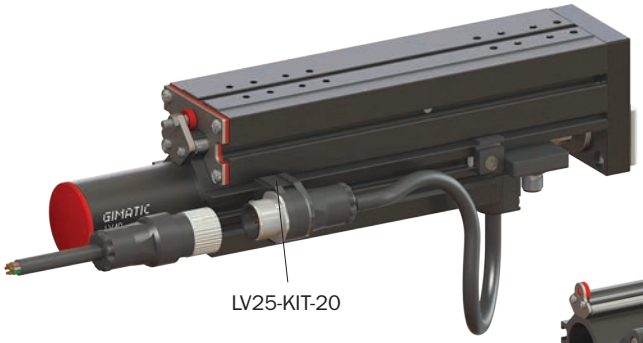

可现场接线连接器

提供配有 300 毫米标准线缆插座的 ML 线性电机、LV 和 LVP 执行器。
可以通过标准 M23 阳性和阴性连接器（6 针脚）连接 300 伏总线电压型号的功率信号。

Field-wireable connectors

ML linear motors, LV and LVP actuators are supplied with a 300 mm standard cable outlet.
Power signals for models with BUS voltage of 300 V can be connected through standard M23 male and female connectors (6 pin).

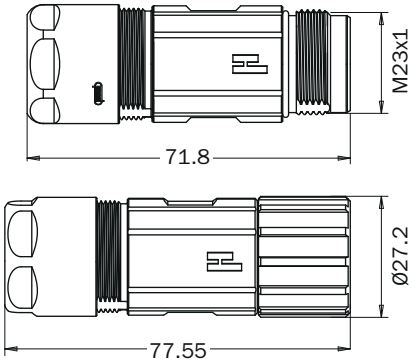

	CFGM2300600	CMGM2300600
接触器类型 *Type of contact*	M23 阴性 *M23 female*	M23 阳性 *M23 male*
接触器数量 *Number of contacts*	6 极 (5+PE) *6-poles (5+PE)*	
线缆直径 *Cable diameter*	7 ÷ 17 mm	
标称电流 *Nominal current*	28 A	
标称电压 *Nominal voltage*	600 Vdc	
导体横截面积 *Conductor cross-section*	max 2.5 mm²	
外罩材料 *Housing material*	铜锌合金 *Copper-zin alloy*	
插入件材料 *Insert material*	PAG、PBT 防火等级 V-0 *PAG, PBT fire protection class V-0*	
接触器材料 *Contact material*	黄铜合金（镀金） *Brass alloy (gold plated)*	
运行温度 *Operating temperature*	-40 ÷ 125°C	
防护等级 *Degree of protection*	IP67/IP69K（连接） *IP67/IP69K (Connected)*	
质量 *Weight*	105g	85g

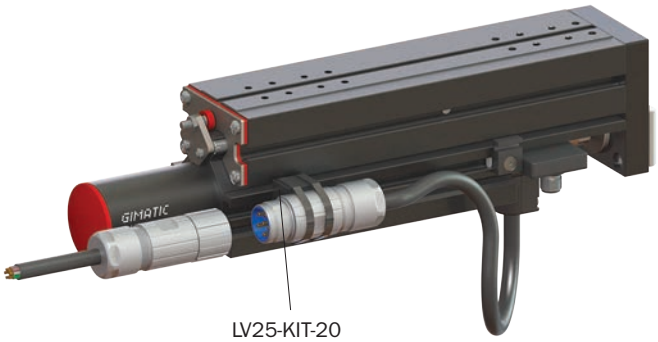

连接器安装支架

LV25-KIT-20

- 质量：27 克

Mounting bracket connector

LV25-KIT-20

- *Weight: 27 g*

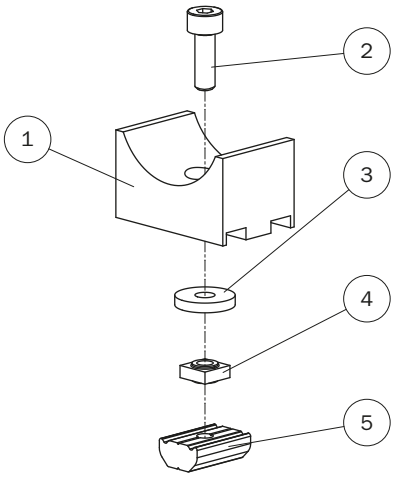

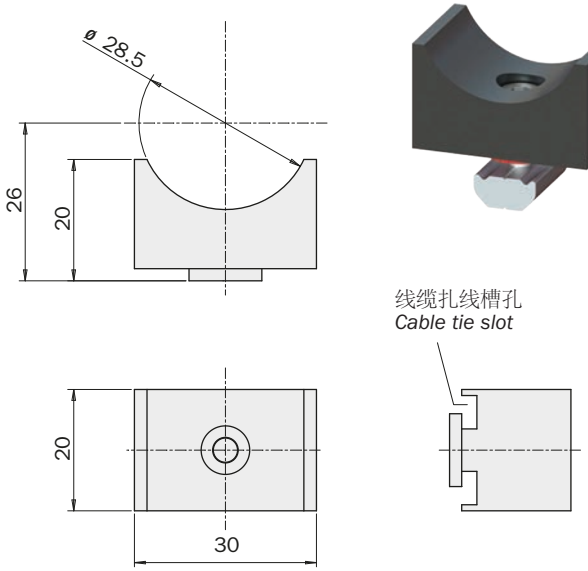

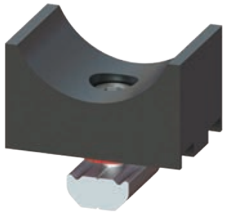

1	连接器紧固支架e	1	LV25050-46	*Mounting bracket connector*	*1*
2	六角头帽螺丝 M4x12 DIN 912 Z/B	1	VITE-286	*TCEI M4x12 DIN 912 Z/B*	*2*
3	隔离器	1	ZE1030-05	*Spacer*	*3*
4	方形螺母 M4	1	MFM-058	*M4 square nut*	*4*
5	M4 螺母，L=15	1	MFI-177	*M4 L=15 nut*	*5*

加长线缆

提供用于线性电机电气连接的加长线缆，与 CF 系列可现场接线连接器一起使用。

Extension cables

Extension cables available for the electric connection of linear motors, to be used with the CF series of field-wireable connectors.

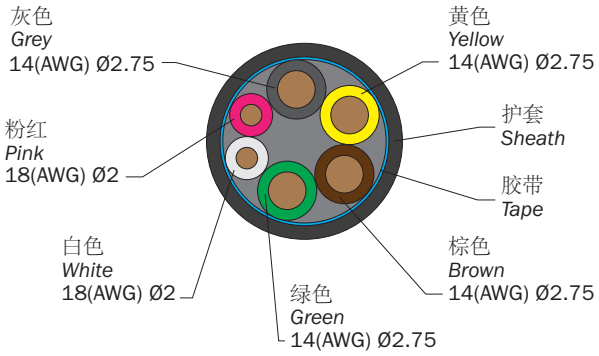

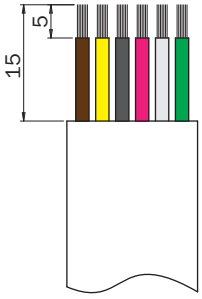

	SPZ-6P-090T-02500	SPZ-6P-090T-05000	SPZ-6P-090T-10000	
应用	线性电机 / *Linear motor*			*Application*
极数	6 + Drain Wire			*Number of poles*
配置	4x 14(AWG) + 2x 18(AWG) + Drain Wire (19x0.15)UL STYLE 20234			*Configuration*
标准长度	2.5 m	5 m	10 m	*Standard length*
护套	PUR			*Sheath*
绝缘体	PVC			*Insulation*
导体识别	颜色 - DIN 47100 标准 / *Colour - DIN 47100 standard*			*Conductor identification*
护套外径	Ø9			*Sheath outer diameter*
温度范围	-30°C ÷ +80°C			*Temperature range*
线性质量	127 g/m			*Linear weight*

CF M8 可现场接线连接器

也提供 M8 的 3 针脚和 4 针脚平直 180° 阳性和阴性可现场接线连接器，以实现电动抓持器和执行器的个性化连接。

CF M8 Field-wireable connectors

M8, 3 and 4 pin, straight 180°, male and female field-wireable connectors are also available to achieve a personalised connection of electric grippers and actuators.

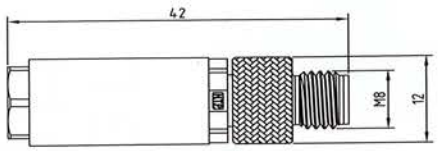

	CFGM800300	CMGM800300	CFGM800400	CMGM800400
接触器类型 *Type of contact*	M8 阴性 *M8 female*	M8 阳性 *M8 male*	M8 阴性 *M8 female*	M8 阳性 *M8 male*
接触器数量 *Number of contacts*	3 极 *3-poles*	3 极 *3-poles*	4 极 *4-poles*	4 极 *4-poles*
线缆套 *Cable gland*	PG7			
导体横截面积 *Conductor cross-section*	max 0.50 mm²			
标准 *Standard*	IEC 61076-2-101 (Ed. 1) / IEC 60947-5-2			
外罩颜色 *Housing colour*	黑色 *black*			
额定电压 *Rated voltage*	60 V AC/DC			
额定电流 *Rated current*	4 安（0.14 平方毫米为 2 安） *4 A (2A at 0.14 mm²)*			
接触器类型 *Type of contact*	螺丝 *screw*			
适合线缆 *Suitable cables*	外径 3.5 至 5 毫米 *outer diameter 3.5 to 5 mm*			
接触器材料 *Contact material*	磷青铜 *phosphor bronze*			
接触器表面材料 *Contact surface material*	Nickel +0.45 µm AU gold plated			
外罩材料 *Housing material*	s尼龙 6 +30% 玻璃纤维 *sNylon 6 +30% glass fibre*			
耦合螺母材料 *Coupling nut material*	CuZnNi			
O 型环 *O-Ring*	NBR			
防护等级 (IEC 60529) *Protection rating (IEC 60529)*	IP67			
温度范围 *Temperature range*	-25°C ÷ +70°C			

电源

带有通用交流输入和 24 伏输出的 MEAN WELL 电源（SP 系列）。可以串联这些设备，以达到更高的运行电压（例如 ML2570X4 和 ML2570X6 电机要求的 72 伏）。

Power supplies

MEAN WELL power supplies (series SP) with universal AC input and 24 V output. These devices can be connected in series to achieve higher operating voltages (for instance the 72 V required by the ML2570X4 and ML2570X6 motors).

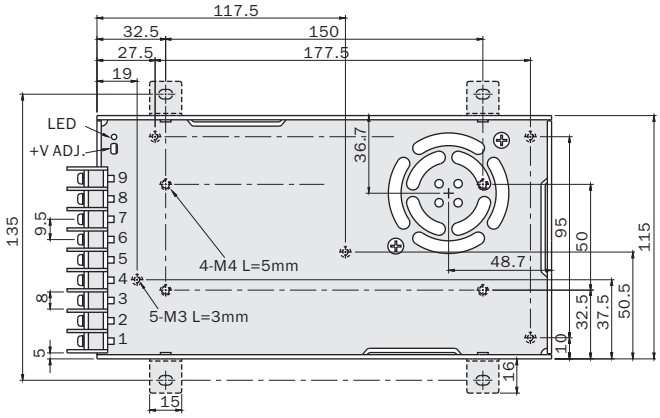

	MPS24-8.4	MPS24-13
额定电流 *Rated current*	8.4 A	13 A
额定功率 *Rated power*	200 W	320 W

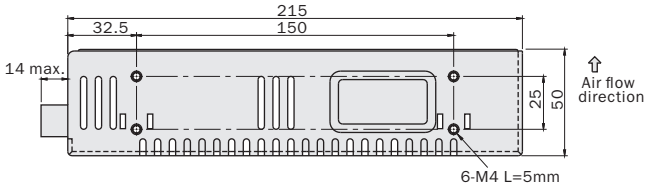

开关

通用可变电压电源，配置用于 24 伏，配有用于直接打开/关闭控制 Mechatronics 系列电动抓持器和执行器的按钮。
提供配有 PNP 或 NPN 输入的两种版本。

Switch

Variable voltage power supplies for general use configured for 24 V and equipped with a button for direct open/close control of the Mechatronics series electric grippers and actuators.
Available in two versions with PNP or NPN input.

	MPS24-1-S-PNP	MPS24-1-S-NPN
输入 *Input*	PNP	NPN
额定电流 *Rated current*	1 A	
额定功率 *Rated power*	25 W	

弹簧压缩器

提供要求平衡系统或负载质量的 LV 和 LVP 线性执行器应用的弹簧压缩器。

Spring compensators

Spring compensators are available for vertical applications of LV and LVP linear actuators that require balancing the system's or the load's weight.

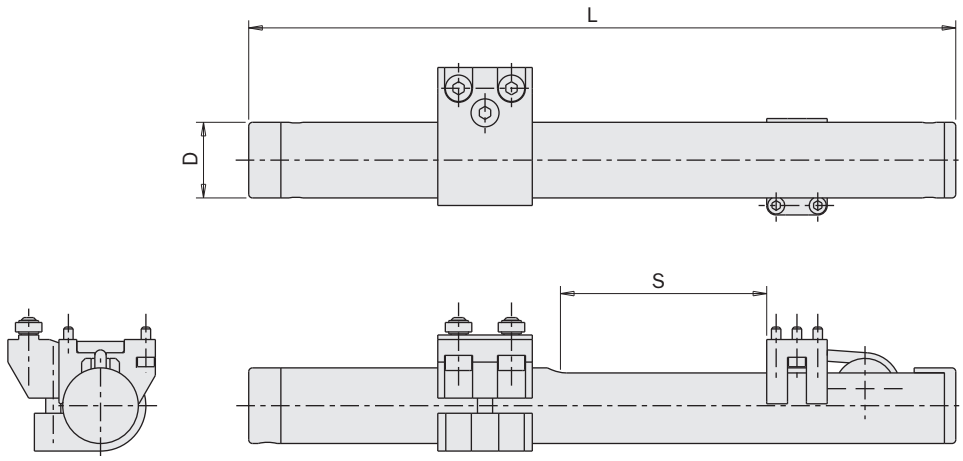

	LV25-KIT-50	LV25-KIT-100	LV25-KIT-150	LV25-KIT-200	LV40-KIT-100 (*)	LV40-KIT-150 (*)	LV40-KIT-200 (*)
线性执行器 *Linear actuator*	LV25050	LV25100	LV25150	LV25200	LV40100	LV40150	LV40200
L	187 mm	227 mm	284 mm	339 mm	270 mm	320 mm	370 mm
直径 *Diameter*	20 mm	20 mm	20 mm	20 mm	30 mm	30 mm	30 mm
总质量 *Total Mass*	105 g	136 g	165 g	191 g	330 g	373 g	420 g
行程 (S) *Stroke (S)*	50 mm	100 mm	150 mm	200 mm	100 mm	150 mm	200 mm
刚度 *Stiffness*	100 N/m				1225 N/m		

(*) 正在构造
Under construction

安装支架

LV25-KIT-04

- 质量： 30 克

Mounting bracket

LV25-KIT-04

- *Weight: 30 g*

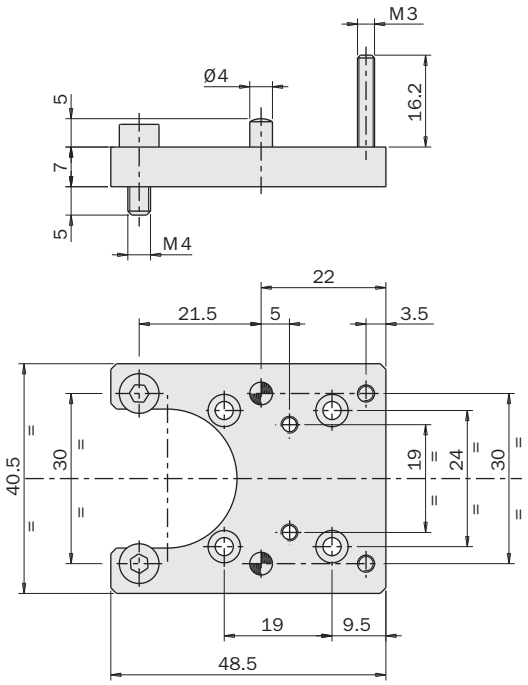

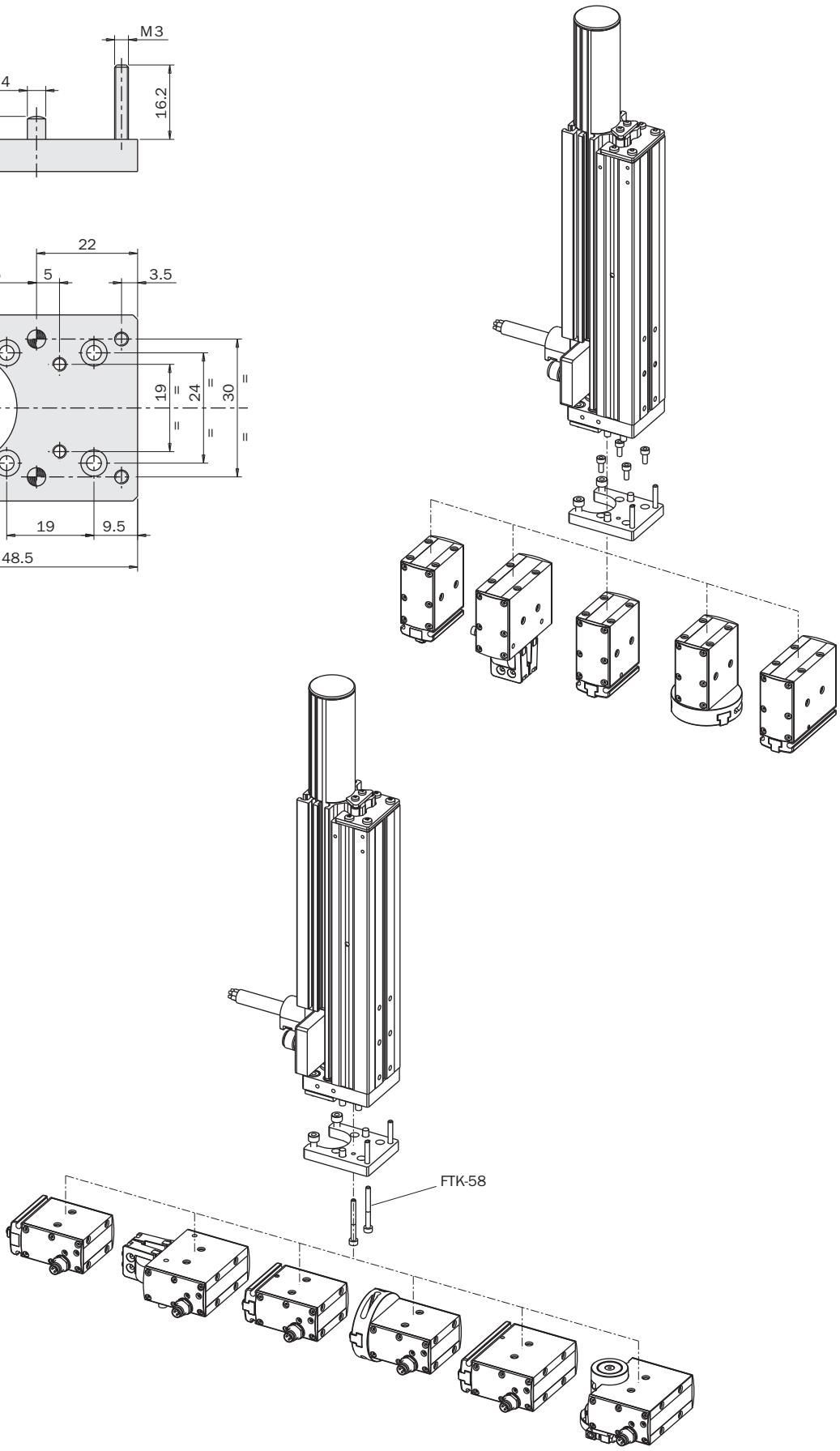

安装支架

LV40-KIT-04

- 质量： 105 克

Mounting bracket

LV40-KIT-04

- *Weight: 105 g*

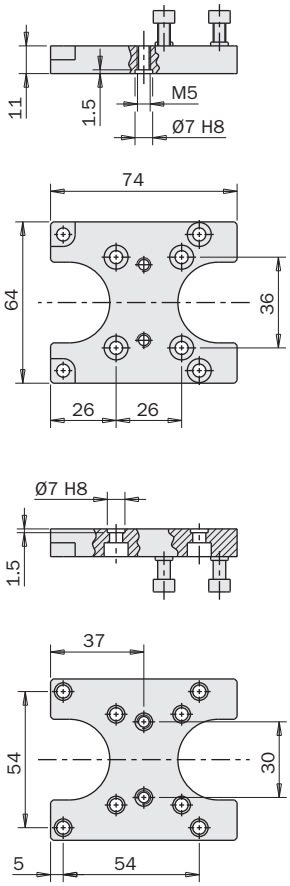

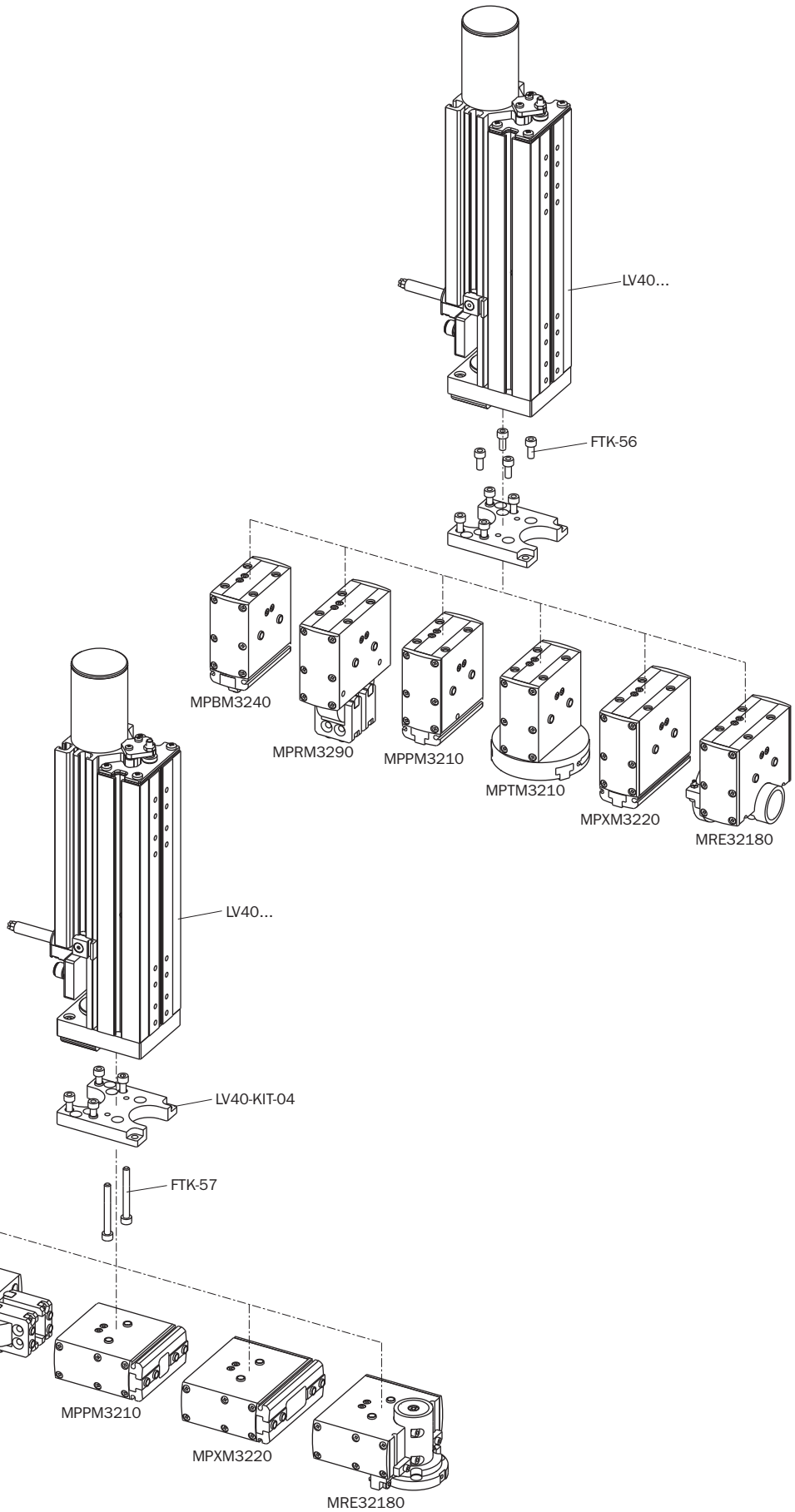

洁净室抓持解决方案

通过集成 KIT-GMP-G，Gimatic 电动抓持器可以在要求高标准清洁度和卫生度的环境中运行。采用适配器能够将电动抓持器紧固到机器人接口（需另行购买）并通过可灭菌硅氧烷罩盖保护其运行。可以通过特殊的卫生不锈钢螺丝紧固抓持手指（需另行购买）。系统满足最严格的 GMP（良好生产规范）A 级和 B 级清洁度标准。

其主要特征是：

- 适用于抓持器 MPPM1606。
- 兼容 GMP 的 A 级和 B 级清洁度标准
- 采用硅氧烷 Silpuran® Wacker FDA 21 CFR § 177.2600 制造的罩盖。
- 兼容过氧化氢 (VHP-H2O2) 和 UV 清洁程序。
- 整个系统符合 IP65 防护等级
- 通过 ISO 4 洁净室的 ISO14644-1 认证。
- 不锈钢卫生螺丝 (Novonox)。
- 透明表面便于读取内部传感器的 LED 灯和电源状态 LED 灯。
- 卫生设计表面防止聚积细菌。
- 采用防旋转系统便于紧固抓持手指。

Cleanroom Gripping Solution

Gimatic electric grippers can operate in environments characterised by a high standard of cleanliness and hygiene by integrating the KIT-GMP-G. An adapter enables fastening the electric gripper to a robot interface (not included) and protecting its operation by means of a sterilisable silicone cover. The gripping fingers (not included) can be fastened by means of special hygienic stainless steel screws. The systems meets the most stringent GMP (Good Manufacturing Practice) cleanliness standards for Grade A and B.

Its main characteristics are:

- *Suitable for gripper MPPM1606.*
- *Compliant with GMP Grade A and B cleanliness standards*
- *Cover made in Silicone Silpuran®Wacker FDA 21 CFR §177.2600.*
- *Compatible with hydrogen peroxide (VHP-H2O2) and UV cleaning procedures.*
- *Complete system with IP65 protection rating*
- *ISO14644-1 certification for ISO 4 cleanrooms.*
- *Stainless steel hygienic screws (Novonox).*
- *Transparent surface that enables reading the LEDs of the internal sensors and the power supply status LEDs.*
- *Hygienic design surfaces preventing the build-up of bacteria.*
- *Easy fastening of gripping fingers with anti-rotation system.*

Fraunhofer IPA TESTED® DEVICE
Gimatic S.r.l.
Gripper MPPM1606-KIT-GMP
Report No. GI 1410-728

Fraunhofer IPA TESTED® DEVICE
GIMATIC S.p.A.
Parallel gripper MPPM1606
Report No. GI 1112-583

IP65
ENVIRONMENT DEGREE

H_2O_2
CLEANING PROCEDURE

EMC / CE

09/2016

尺寸（毫米）
Dimensions (mm)

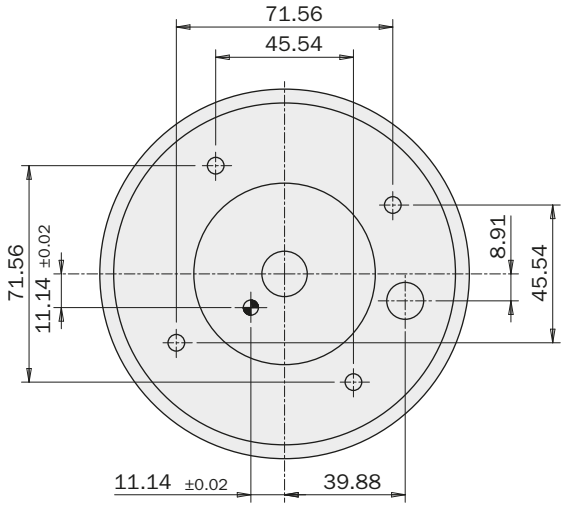

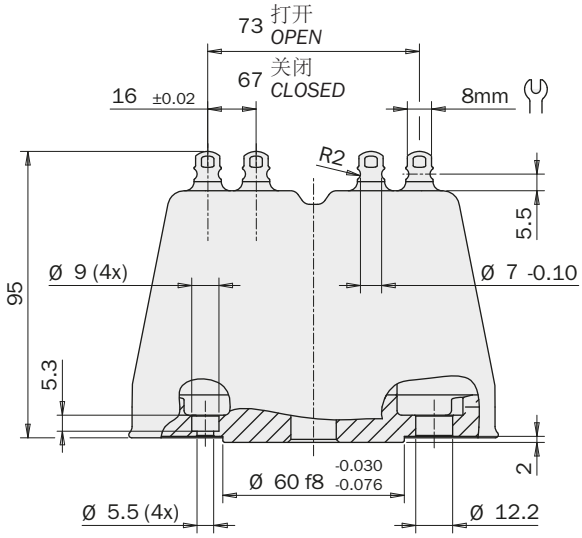

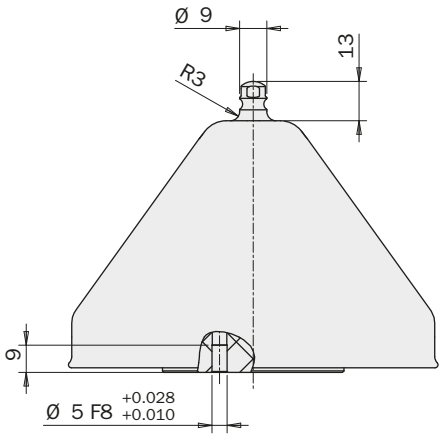

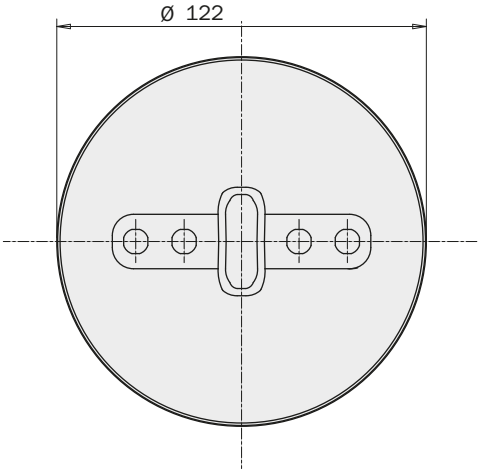

组装
Assembly

- 用螺丝将机器人界面固定到机器人上。

- *Fix robot interface to the robot by screws.*

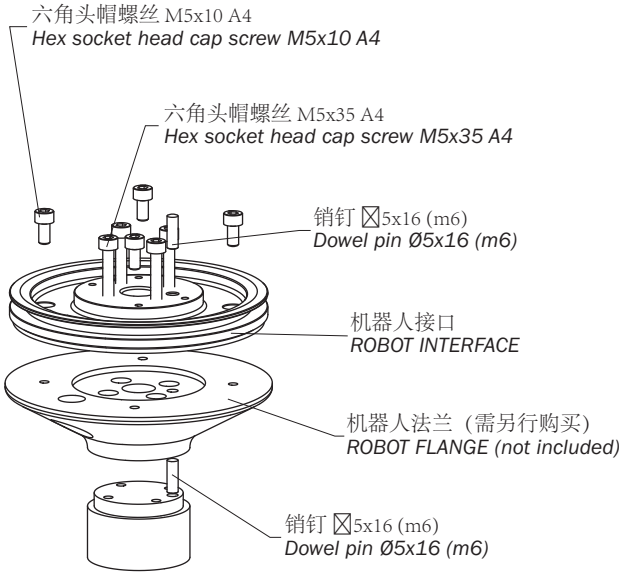

- 用螺丝及其对中衬套将抓持器固定到抓持器接口，从而形成抓持器分组件。
- 螺丝的最大夹持扭矩 = 1.5 牛 · 米

- *Fix gripper to the gripper interface with screws and its centering sleeves forming the gripper subassembly.*
- *Maximum clamping torque of the screws = 1.5 Nm*

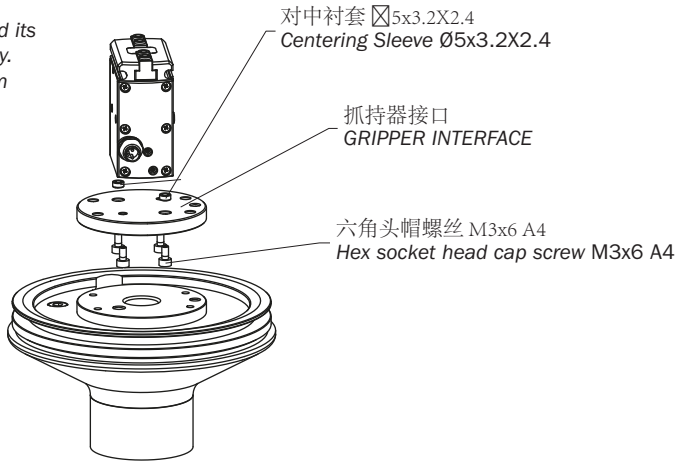

- 将抓持器分组件固定到主接口上。

- *Fix the gripper subassembly on the main interface.*

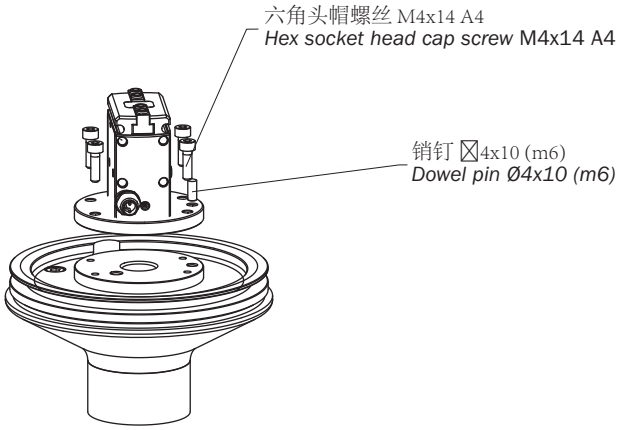

组装
Assembly

- 用螺丝和对中衬套固定内部颚式钳。
- 此时可以将磁性传感器增加到槽孔上，以检查颚式钳位置。应事先完成机器人接口的布线。
- 螺丝的建议夹持扭矩 = 1.0 牛 · 米
- 螺丝的最大夹持扭矩 = 1.5 牛 · 米

- *Fix internal jaws by screws and centering sleeves.*
- *At this point it is possible to add magnetic sensors on the groove to check jaws position. Cabling to the robot interface should be done in advance.*
- *Recommended clamping torque of the screws = 1.0 Nm*
- *Maximum clamping torque of the screws = 1.5 Nm*

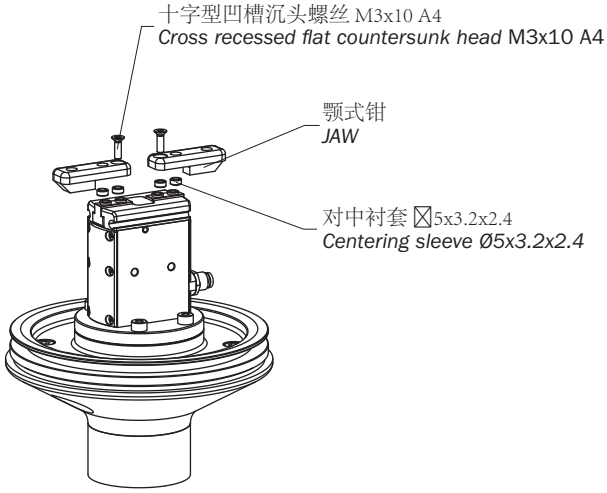

- 用特殊硅氧烷盖盖住系统并放置手指的螺丝。
- 螺丝的最大夹持扭矩 = 1.5 牛 · 米

- *Cover the system with the special silicone cap and place screw for fingers.*
- *Maximum clamping torque of the screws = 1.5 Nm*

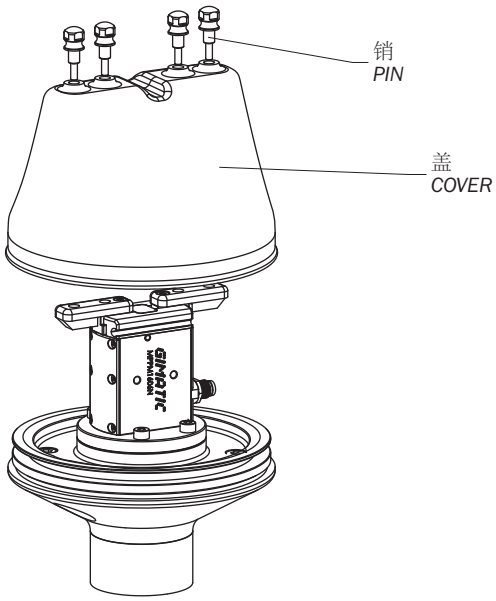

用户可以创建其特定应用需要的特殊抓持手指并用医用螺丝将其固定到系统。下图显示用两个螺丝紧固的抓持手指的示例。
视形状而定，可以用一个或两个螺丝紧固。

Users can create special gripping fingers for their specific application needs and fit them to the system by means of medical screws. The following figure shows an example of gripping fingers made with a two-screw fastening.
Fastening can be achieved with one or two screws depending on the shape.

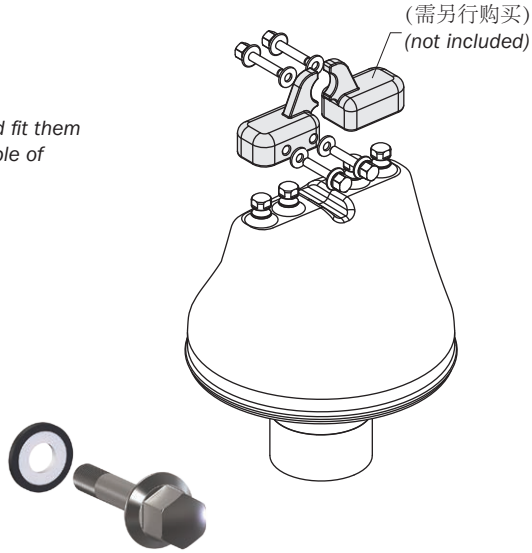

部件列表
Part list

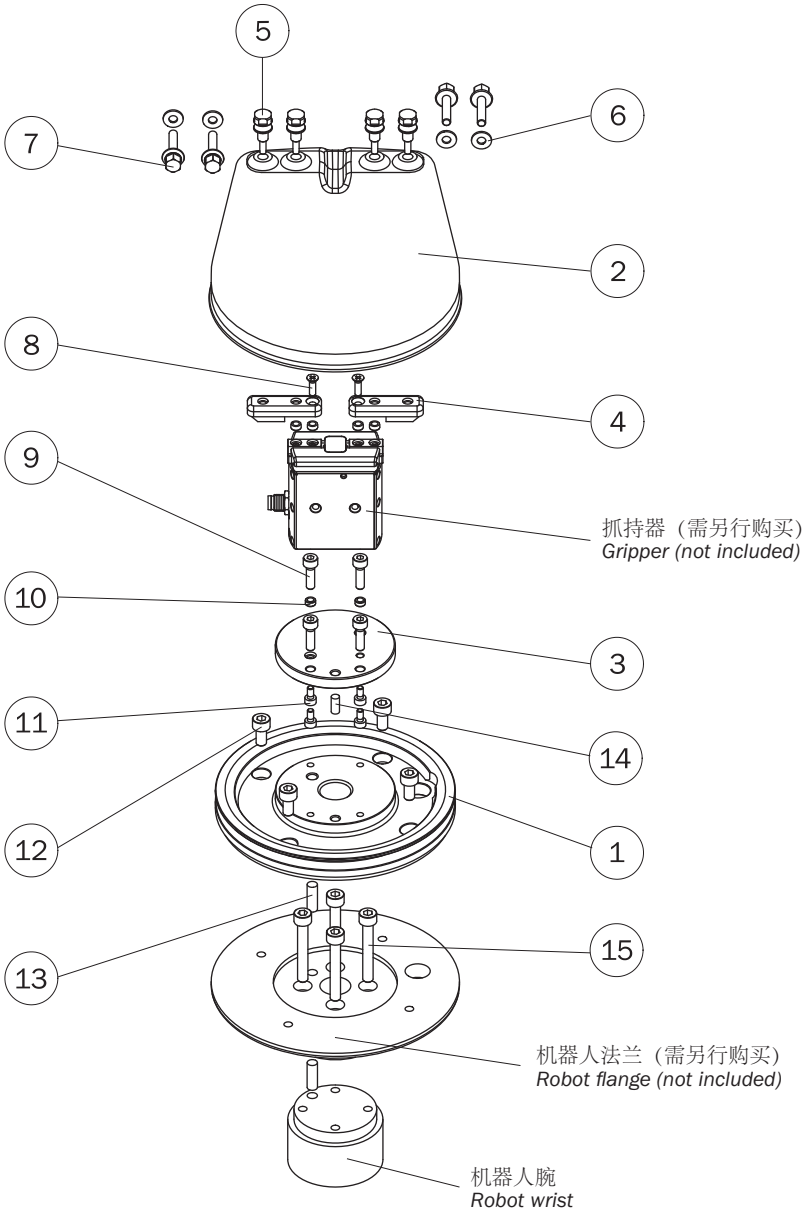

包含部件
Included parts

1	机器人接口	1	1 x 142 g	*Robot interface*	*1*
2	盖	1	1 x 86 g	*Cover*	*2*
3	抓持器接口	1	1 x 41 g	*Gripper interface*	*3*
4	内部颚式钳	2	2 x 6.2 g	*Internal jaws*	*4*
5	销	4	4 x 5.3 g	*Pin*	*5*
6	卫生密封 4.1 x 9.7 (Novonox)	4	4 x 0.1 g	*Hygienic sealing 4.1 x 9.7 (Novonox)*	*6*
7	六角头螺丝，抛光，M4 x 20 (Novonox)	4	4 x 5.0 g	*Hex head screw polished M4 x 20 (Novonox)*	*7*
8	十字型凹槽沉头螺丝 M3x10 A4	2	2 x 0.5 g	*Cross recessed flat countersunk head M3x10 A4*	*8*
9	六角头帽螺丝 M4x14 A4	4	4 x 1.8 g	*Hex socket head cap screw M4x14 A4*	*9*
10	对中衬套 Ø5x3.2x2.4	6	6 x 0.3 g	*Centering Sleeve Ø5x3.2x2.4*	*10*
11	六角头帽螺丝 M3x6 A4	4	4 x 0.8 g	*Hex socket head cap screw M3x6 A4*	*11*
12	六角头帽螺丝 M5x10 A4	4	4 x 2.9 g	*Hex socket head cap screw M5x10 A4*	*12*
13	销钉 Ø5x16 (m6)	2	2 x 1.7 g	*Dowel pin Ø5x16 (m6)*	*13*
14	销钉 Ø4x10 (m6)	1	1 x 1.5 g	*Dowel pin Ø4x10 (m6)*	*14*
15	六角头帽螺丝 M5x35 A4	4	4 x 6.2 g	*Hex socket head cap screw M5x35 A4*	*15*

注意

- 请勿将产品置于可能接触异物（例如机油）或存在腐蚀性气体或易燃气体或者接近易燃材料的地方。
- 请勿将产品安装在加热部件附近。
- 请勿用湿手执行接线或运行产品。
- 请勿只握住线缆移动产品。
- 请勿尝试用手强行移动抓持器的颚式钳。

Caution

- *Do not place the product in place where it may come in contact with foreign matter such as oil nor in an atmosphere of corrosive gas or flammable gases nor in place near inflammable material.*
- *Do not install the product near heating element.*
- *Do not perform wiring nor operate the product with wet hand.*
- *Do not transfer the product by holding only the cable.*
- *Do not attempt to force gripper jaws' movement by hand.*

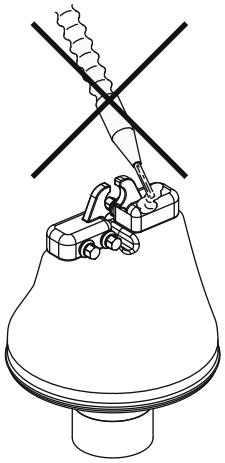

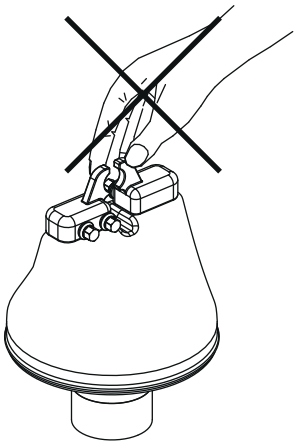

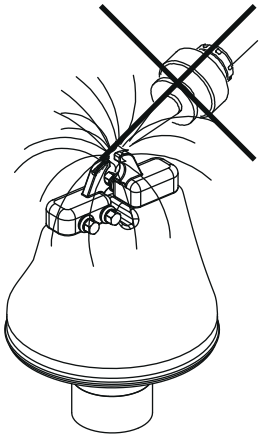

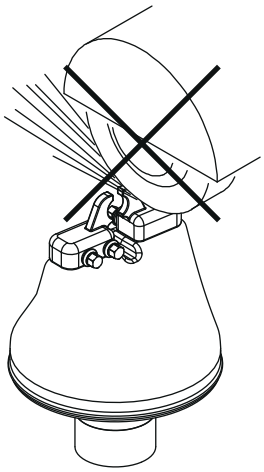

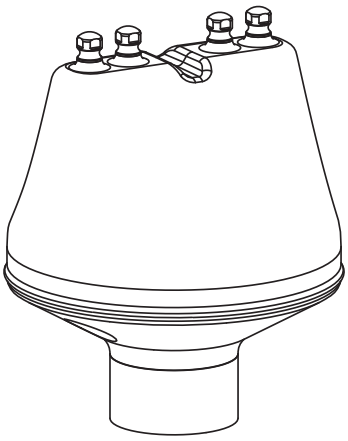

CE 标志参考

系统符合：

CE Marking reference

The system is in conformance with:

Directive 2004/108/CE, EN 62233 (2008-04), EN 61000-6-2+EC+IS1 (2005-08;2005-09;2005-11), EN 61000-6-3+A1 (2007-01;2011-03), EN 61000-6-4 (2007-01), EN 55016-2-1+A1 (2004-10;2005-08), EN 55016-2-3 (2006-12),
EN 61000-4-2 (2009-03), EN 61000-4-3+A1+IS1+A2 (2006-05;2008-02;2009-02;2010-07), EN 61000-4-4+A1 (2004-12;2010-03), EN 61000-4-5 (2006-11), EN 61000-4-6+A1+IS1 (1996-07;2001-12;2004-07), EN 61000-4-6 (2009-03), CEI EN 60529 (1997-06).

IPA 认证参考

该系统已经声称适合用于弗朗霍夫生产技术研究所 GI 1410-728 报告所述的卫生区域。

IPA Certification reference

The system has been declared suitable for use in hygienic areas by Fraunhofer IPA Institute as stated in report No. GI 1410-728

注释
Notes

重要尺寸数据

下面是计算Mechatronics产品应用尺寸通常要求的主要数据列表。

电动抓持器
- 内部或外部插座类型。
- 抓持在颚式钳移动方向的工件尺寸。
- 抓持和/或释放允许的最长时间。
- 要求的抓持力。
- 要求的颚式钳行程。
- 抓持臂。
- 运行频率。

旋转执行器
- 旋转允许最长时间。
- 旋转扭矩。
- 要求的角形行程。
- 负载转动惯量。
- 运行频率。

ML、LV 和 LVP
- 各个定位允许的行程和最长时间。
- 负载循环持续时间。
- 水平或垂直应用（方向）。
- 移动运行频率（持续或间歇循环）。
- 负载移动允许的最高加速度和最高速度的可能极限。
- 将处理的负载质量。
- 以负载循环为函数的阻力（轴向）分布图。
- 外部剪切力大小。
- 环境运行温度。
- 执行器固定系统（固定支架的固定侧、材料和尺寸等）
- 定位分辨率。
- 运行电压（72 伏直流或 325 伏直流）。
- 是否存在任何强制冷却。
- 要求的防护等级。

Fundamental data for sizing

Below is a list of the main data normally required to calculate the sizing of an application with Mechatronics products.

ELECTRIC GRIPPERS
- *Type of gripping, internal or external.*
- *Dimension of the piece to be gripped in the direction of movement of the jaws.*
- *Maximum time allowed for grip and/or release.*
- *Required gripping force.*
- *Required jaw stroke.*
- *Gripping arms.*
- *Operation frequency.*

ROTARY ACTUATORS
- *Maximum time allowed for rotation.*
- *Rotation torque.*
- *Required angular stroke.*
- *Load moment of inertia.*
- *Operation frequency.*

ML, LV and LVP
- *Strokes and maximum times allowed for individual positionings.*
- *Duration of duty cycle.*
- *Horizontal or vertical application (orientation).*
- *Movement operation frequency (continuous or intermittent cycle).*
- *Possible limits of maximum acceleration and maximum speed allowed for load movement.*
- *Mass of the load to be handled.*
- *Resisting (axial) force profile as a function of the cycle.*
- *Magnitude of external forces.*
- *Ambient operating temperature.*
- *Actuator fixing system (fixing side, material and dimensions of the fixing brackets, etc.)*
- *Positioning resolution.*
- *Operating voltage (72 Vdc or 325 Vdc).*
- *Any presence of forced cooling.*
- *Degree of protection required.*

举例: 龙门式拾取放置系统

以下示例中，我们想试验采用龙门式结构进行拾取放置移动所需选择的元件，使用了 X 轴的线性导向器 LVP250300-70，Z 轴的线性执行器 LV25100-70、旋转执行器 MRE16180以及电动抓持器 MPPM1606。

为简便起见，我们作出以下假设：

- 连续移动（轴非同时移动）。
- 负载和颚式钳质量分别为 0.2 千克 0.1 千克。
- 不考虑水平和垂直执行器的滑动摩擦。
- 也不考虑额外外力。
- 被抓持工件宽度为 5 毫米，
- 颚式钳长度为 9 毫米。

Example: Gantry Pick&Place system

In the following example, we want to test the choice of the components necessary to have a Pick&Place motion with a gantry structure, using the linear guide LVP250300-70 for the X axis, the linear actuator LV25100-70 for the Z axis, the rotary actuator MRE16180 and the electric gripper MPPM1606.

For purposes of simplicity, we will assume the following hypotheses:

- *Sequential motion (non-simultaneous movement of the axes).*
- *Mass of load and jaws of 0.2 kg and 0.1 kg, respectively.*
- *Sliding frictions are not considered in horizontal and vertical actuators.*
- *Additional external forces are also not considered.*
- *Width of gripped piece is 5 mm.*
- *Jaw length is 9 mm.*

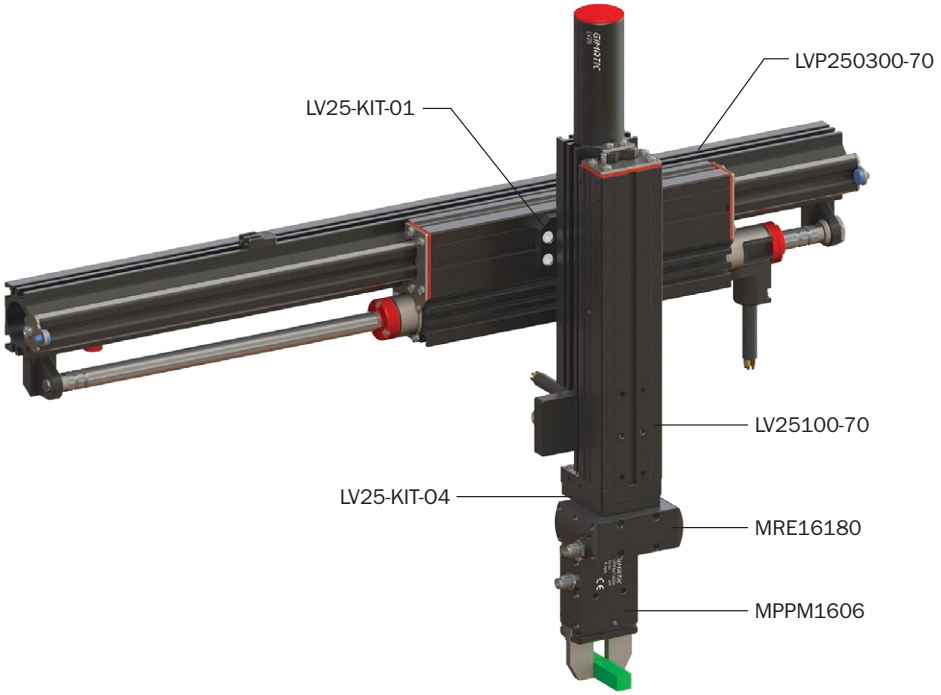

步骤 ***Step***	类型 ***Type***	行程 ***Stroke***	时间 ***Time***
Z1	LV 下降 *LV descent*	+ 40 mm	0.2 s
G	负载抓持 *Load gripping*	+ 5 mm	(*)
R	180° 旋转 *180° rotation*	+ 180°	(*)
Z2	LV 上升 *LV ascent*	- 40 mm	0.2 s
X1	LVP 移动 *LVP shifting*	+ 250 mm	0.5 s
Z3	LV 下降 *LV descent*	+ 40 mm	0.2 s
R	180° 旋转 *180° rotation*	- 180°	(*)
G	负载释放 *Load release*	- 5 mm	(*)
Z4	LV 上升 *Ascent LV*	- 40 mm	0.2 s
X2	LVP 移动 *LVP shifting*	- 250 mm	0.2 s

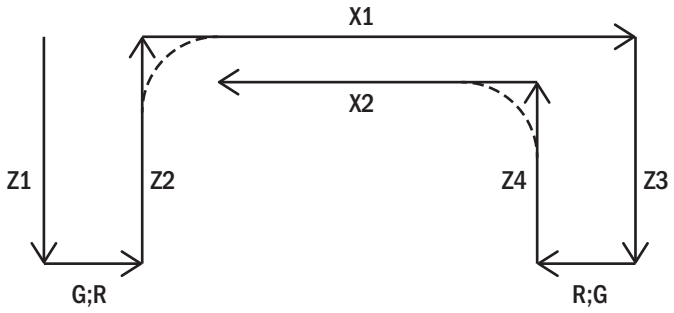

(*)
时间来计算
tempo da calcolare

检查水平执行器

水平执行器 LVP250300-70 支撑垂直移动和抓持装置以及执行横向移动。
假设在相当于下面的 Tx 时间以恒定对称加速度执行移动：

Check of the horizontal actuator

The horizontal actuator LVP250300-70 supports the vertical motion and gripping unit and performs lateral movements. Let us suppose to perform a movement at constant and symmetrical acceleration in a Tx time equivalent to:

$Tx = Tx_1 = Tx_2 = 0.5$ s

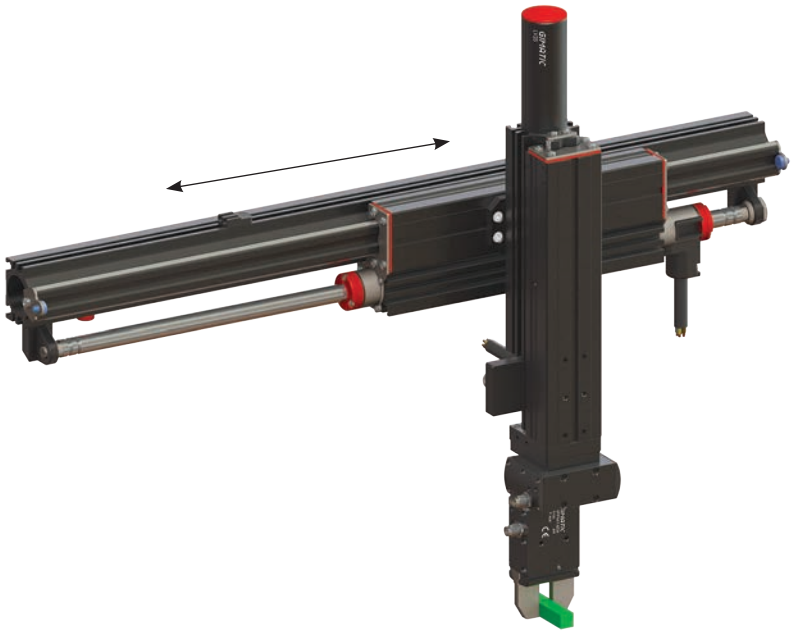

速度分布图
Velocity profile

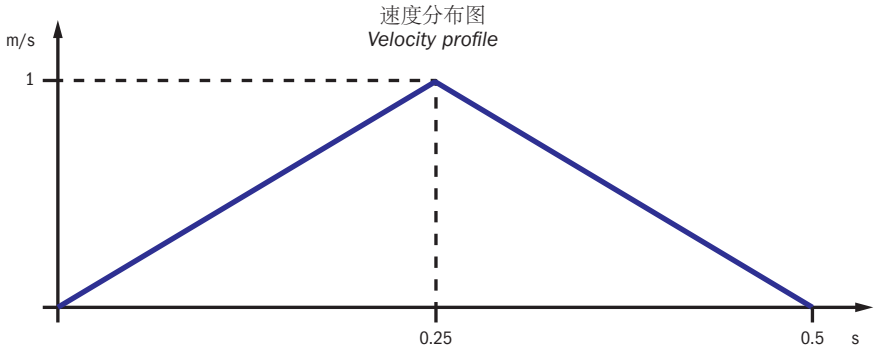

为了简便和安全起见，始终将负载质量考虑为系统的额外质量(实际上，只有一部分移动为全负载)。
因此，传输的总负载 mT 为：

For the sake of simplicity and safety, the load mass is always considered as an additional mass of the system (in actual facts, only one portion of the movement will be at full load).
The total load transported mT is therefore:

m_T =	0.057 kg	+	1.38 kg	+	0.195 kg	+	0.145 kg	+	0.03 kg	+	0.1 kg	+	0.2 kg	=	2.107 kg
	LV25-KIT-01		LV25100		MRE16180		MPPM1606		LV25-KIT-04		螺杆和颚式钳 *screws and jaws*		负载 *load*		

施加的移动包括 4 米/平方秒的加速度。如果缺少摩擦和额外外力，执行器的最高推力必须高于负载和 LVP 导向器的移动质量产生的惯性力 Fx。

The applied movement entails an acceleration of 4 m/s2. In the case of friction and additional external forces being absent, the maximum thrust of the actuator must be higher than the force of inertia Fx resulting from the load and the moving mass of the LVP guide.

$$Fx = (\underset{m_T}{2.107\ \text{kg}} + \underset{\substack{\text{LVP 机架质量} \\ \textit{LVP carriage mass}}}{1.03\ \text{kg}}) \cdot 4\ \text{m/s}^2 \cong 12.55\ \text{N} < 105.4\ \text{N}$$

（目录的峰值力）
(peak force from catalogue)

→ ok

检查垂直执行器

垂直执行器 LV25100-70 支撑抓持装置
并执行上升和下降移动。
假设在相当于下面的 Tz 时间以恒定对称加速度执行移动：

Check of the vertical actuator

The vertical actuator LV25100-70 supports the gripping unit and performs ascent and descent movements.
Let us assume to perform a movement at constant and symmetrical acceleration in a Tz time equivalent to:

$$T_z = T_{z1} = T_{z2} = T_{z3} = T_{z4} = 0.2\ s$$

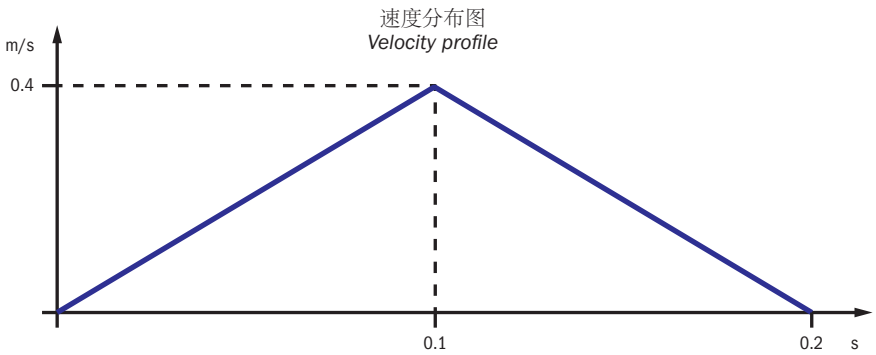

为了简便和安全起见，始终将负载质量考虑为系统的额外质量（实际上，只有一部分移动为全负载）。
因此，传输的总负载 mT 为：

For the sake of simplicity and safety, the load mass is always considered as an additional mass of the system (in actual facts, only one portion of the movement will be at full load).
The total load transported mT is therefore:

$$m_T = \underset{\text{MRE16180}}{0.195\ kg} + \underset{\text{MPPM1606}}{0.145\ kg} + \underset{\text{LV25-KIT-04}}{0.03\ kg} + \underset{\text{螺杆和颚式钳 / screws and jaws}}{0.1\ kg} + \underset{\text{负载 / load}}{0.2\ kg} = 0.67\ kg$$

施加的移动包括 4 米/平方秒的加速度。如果缺少摩擦和额外外力，执行器的最高推力必须高于整体负载（mT + LV 移动质量）和重力产生的惯性力。
下图显示执行器在 0 毫米至 40 毫米行程 S 的最高力相当于 98.1 牛。

The applied movement entails an acceleration of 4 m/s2. In the case of frictions and additional external forces being absent, the maximum thrust of the actuator must be higher than the force of inertia resulting from the overall load (mT + LV moving mass) and from the weight force.
The following graph allows to see that the maximum force of the actuator for a 0 mm to 40 mm stroke S is equivalent to 98.1 N

$$F_z = (\underset{m_T}{0.67kg} + \underset{\text{LV 机架质量 / LV carriage mass}}{0.67\ kg}) \cdot (4\ m/s^2 + 9.81\ m/s^2) \cong 18.5\ N < 98.1\ N$$ （目录的峰值力）(peak force from catalogue) → ok

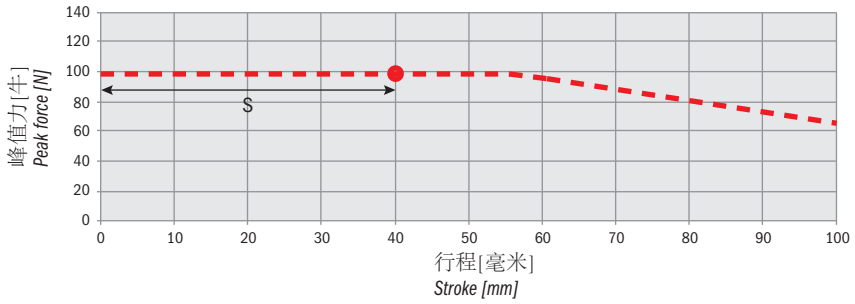

检查旋转执行器和抓持器

可以将抓持器直接连接到旋转执行器，无需使用固定接口。
假设 MRE 和 MPPM 之间采用轴连接。

Check of rotary actuator and gripper

The gripper can be connected directly to the rotary actuator without using fixing interfaces.
We postulate an axis connection between MRE and MPPM.

假设以图中所示方式抓持负载，摩擦系数等于 μ =0.2。
选择的抓持器 (MPPM1606) 以 4 米/平方秒的加速度向上移动，
该加速度等于滑轨 LV25100-70 计算的最高加速度。
确认此类应用的保证安全系数至少为 η =2.0。

Let's suppose that the load should be gripped as in the figure, with a friction coefficient equal to μ=0.2 .
The selected gripper (MPPM1606) moves upwards with an acceleration of 4 m/s² which is equal to the maximum acceleration calculated for the slide LV25100-70.
Let's verify that such an application guarantees a safety coefficient of at least η=2.0 .

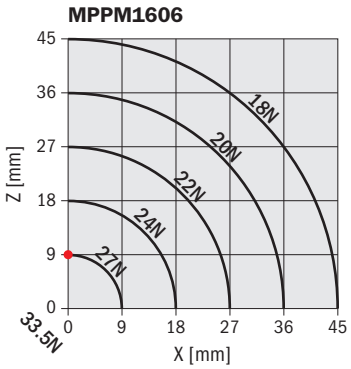

沿着抓持器 MPPM1606 的 Z 轴重心的转动惯量相当于颚式钳和负载必须增加的 0.25 千克 · 平方厘米（目录）。总转动惯量必须低于旋转执行器 MRE16180 的允许最高极限（相当于 6 千克 · 平方厘米）。

The moment of inertia at the centre of gravity along the Z axis of gripper MPPM1606 is equivalent to 0.25 kg cm² (catalogue) to which the contribution of jaws and load must be added. The total moment of inertia must be lower than the permitted maximum limit for rotary actuator MRE16180 (equivalent to 6 kg cm2)

执行器 MRE16180 的目录旋转时间：

Rotation time, as per catalogue, of actuator MRE16180:

$$TonR=0.35\ s$$

与抓持器 MPPM1606 相关的抓持力图得出：

The gripping force graph relevant to gripper MPPM1606 will give:

$$F= 27\ N$$ （颚式钳） *(for jaw)*

垂直平移时的负载动态平衡可以表达为：

The load dynamic balance upon vertical translation can be written as:

$$\eta \cdot m \cdot (g+a) = 2 \cdot \mu \cdot F$$

$$\eta= 2 \cdot \mu \cdot F/[m \cdot (g+a)] = 2 \cdot 0.2 \cdot 27/[0.2 \cdot (9.81+4)] \cong 3.9$$

$$\eta\ 3.9 > \eta\ 2.0\ \ OK$$

可以基于将要抓持的工件尺寸和抓持器性能计算机械抓持时间。
MPPM1606 型的特征是工作时间为 0.21 秒，颚式钳关闭时间为 0.08 秒（最大行程 6 毫米）。
因此，抓持 5 毫米物体的时间为：

The mechanical gripping time can be calculated based on the dimensions of the piece to be gripped and the performances of the gripper.
Model MPPM1606 is characterised by a working time of 0.21 and a jaw closing time of 0.08 s (for the maximum stroke of 6 mm).
Therefore the time of gripping of a 5 mm object is:

$$T\ on\ G = 0.21 - 0.08 \cdot 5/6 \cong 0.14\ s$$

检查执行器的热性能

Check of the thermal behaviour of the actuators

LVP250300v-70
水平轴只是对于系统循环的一部分移动。
在轴静止阶段，不要求产生推力（假设没有额外力）。

LVP250300-70
The horizontal axis is in motion only for a portion of the cycle of the system.
In the phases in which the axis is stationary, a generation of thrust is not required (hypothesis of absence of additional forces)

$$T\ on\ LVP = 2 \cdot Tx = 2 \cdot 0.5\ s = 1\ s$$

$$T\ off\ LVP = 4 \cdot Tz + 2 \cdot T\ on\ R + 2 \cdot T\ on\ G = 4 \cdot 0.2\ s + 2 \cdot 0.35\ s + 2 \cdot 0.14\ s = 1.78\ s$$

因此，我们可以计算整个循环期间执行器要求的均方推力，以检查是否低于轴的极限值。

We can therefore calculate the mean square thrust required by the actuator during the entire cycle to check that is lower than the limit value of the axis.

$$Frms = \sqrt{\frac{Fx^2 \cdot T\ on\ LVP}{T\ on\ LVP + T\ off\ LVP}} = \sqrt{\frac{12.55^2 \cdot 1}{1 + 1.78}} \cong 7.53\ N < 32N$$

（目录的连续力）
(continuous force fromcatalogue) → ok

LV25100-70
垂直轴只是对于系统循环的一部分移动。
在轴静止阶段，要求生成相当于负载质量 W 的推力。

LV25100-70
The vertical axis is in motion only for a portion of the cycle of the system.
In the phases in which the axis is stationary, the generation of a thrust equivalent to the weight W of the load is required.

$$W = (0.67\ kg + 0.67\ kg) \cdot 9.81\ m/s^2 \cong 13.1\ N$$

$$T\ on\ LV = 4 \cdot Tz = 4 \cdot 0.2\ s = 0.8\ s$$

$$T\ off\ LV = 2 \cdot Tx + 2\ T\ on\ R + 2 \cdot T\ on\ G = 2 \cdot 0.5\ s + 2 \cdot 0.35\ s + 2 \cdot 0.14\ s = 1.98\ s$$

因此，我们可以计算整个循环期间执行器要求的均方推力，以检查是否低于轴的极限值。

We can therefore calculate the mean square thrust required by the actuator during the entire cycle to check that is lower than the limit value of the axis.

$$Frms = \sqrt{\frac{Fz^2 \cdot T\ on\ LV + W^2 \cdot T\ off\ LV}{T\ on\ LV + T\ off\ LV}} = \sqrt{\frac{18.5^2 \cdot 0.8 + 13.1^2 \cdot 1.98}{0.8 + 1.98}} \cong 14.86N < 25N$$

（目录的连续力）
(continuous force fromcatalogue) → ok

MRE 和 MPPM 的运行频率循环时间和试验

Cycle time and test of the operation frequency of MRE e MPPM

系统的循环时间 (Tc) 相当于移动时间的总和：

The cycle time (Tc) of the system is equivalent to the sum of the movement times:

$$Tc = T\ off\ LVP + T\ on\ LVP = 1.78\ s + 1\ s = 2.78\ s$$

通过计算循环频率并将其与各个元件的极限频率对比，以执行 MRE 旋转执行器和 MPPM 抓持器运行频率的试验。
为此，需要注意，目录中的报告频率代表颚式钳（抓持器）的整个关闭和打开循环以及整个顺时针和逆时针旋转循环（旋转执行器）。
另外，旋转执行器的频率值指无负载旋转：对于非可忽略负载条件应用，我们推荐使用安全系数 η=1.2。

The test of the MRE rotary actuator and MPPM gripper operation frequency is performed by calculating the cycle frequency and comparing it with the limit frequency of the individual component.
To this purpose, it is worth reminding that the frequencies reported in the catalogue represent the complete closing and opening cycles of the jaws (in the case of grippers) and the complete clockwise and anticlockwise rotation cycles (in the case of rotary actuators).
Moreover, the frequency value for the rotary actuators refers to a loadless rotation: for applications with non-negligible load conditions we recommend using a safety factor of η=1.2 .

循环频率 = 1/T循环 = 1/2.78 ≅ 0.36 赫兹
MPPM1606： 0.36 赫兹 < 1 赫兹（目录）→ 良好
MRE16180： 0.36 · 1.2 = 0.43 赫兹 < 0.76 赫兹（目录）→良好

Cycle frequency = 1/Tcycle = 1/2.78 ≅ 0.36 Hz
MPPM1606: 0.36 Hz < 1 Hz (catalogue) → ok
MRE16180: 0.36 · 1.2 = 0.43 Hz < 0.76 Hz (catalogue) → ok

09/2016

应用结果

本计算示例中的试验表明选择的元件适合于执行预期的移动循环。
上述考虑因素是理论性的，基于元件特征的平均值。循环的可行性也与其它方面相关，例如：正在使用的单个元件的实际特征、可能存在正在作用于系统上的额外外力以及计量系统的校准。

Results of the application

The test made in this example of calculation showed that the selected components are suitable for performing the intended movement cycle.
The above considerations are of a theoretical nature and are based on the average values of the characteristics of the components. The feasibility of the cycle is also related to other aspects, such as: the actual characteristics of the single components being used, the possible presence of additional external forces acting on the system and the calibration of the gauging system.

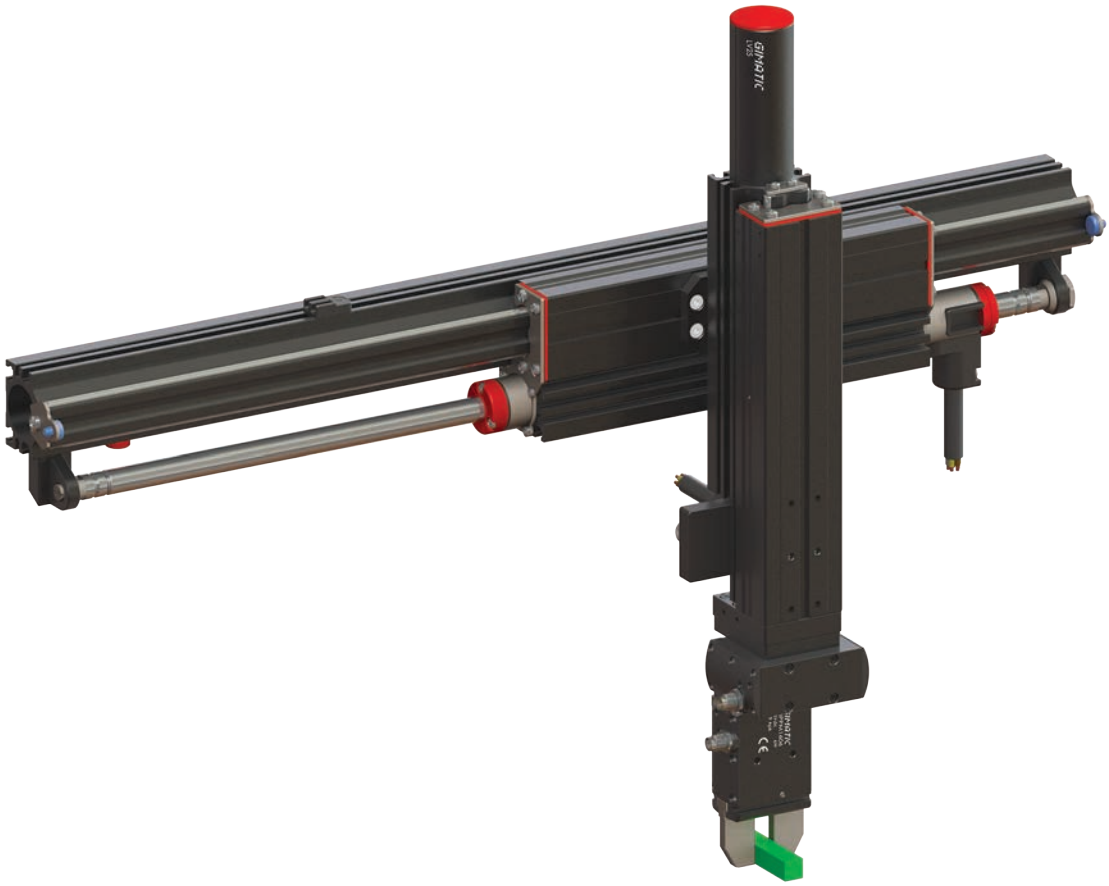

步骤 ***Step***	类型 ***Type***	行程 ***Stroke***	时间 ***Time***
Z1	LV 下降 *LV descent*	+ 40 mm	0.2 s
G	负载抓持 *Load gripping*	+ 5 mm	0.14 s
R	180° 旋转 *180° rotation*	+ 180°	0.35 s
Z2	LV 上升 *LV ascent*	- 40 mm	0.2 s
X1	LVP 移动 *LVP shifting*	+ 250 mm	0.5 s
Z3	LV 下降 *LV descent*	+ 40 mm	0.2 s
R	180° 旋转 *180° rotation*	- 180°	0.35 s
G	负载释放 *Load release*	- 5 mm	0.14 s
Z4	上升 *Ascent*	- 40 mm	0.2 s
X2	LVP 移动 *LVP shifting*	- 250 mm	0.5 s

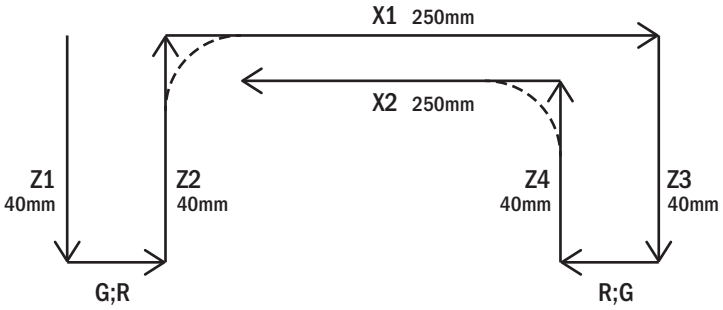

术语

总抓持力
颚式钳平均抓持力。

总抓持力
颚式钳平均抓持扭矩。

旋转扭矩
旋转板上的平均提供扭矩。

行程
颚式钳总行程平均值。

频率
周期的平均频率值，包括防止电机过热的打开、关闭和冷却时间。
在无负载连接到执行器时计算该值。

$$F\ 循环(赫兹) = \frac{1}{(抓持器运行时间 + 冷却时间)\ x\ 2}$$

颚式钳关闭时间
电机开始运行后和弹簧压缩前的颚式钳机械移动时间。

抓持器工作时间
启动电机、颚式钳移动和弹簧压缩的总时间。

负载周期
执行器在激活状态的时间与形成包括冷却时间的整个周期时间的比率。

$$D\ (\%) = \frac{抓取器运行时间}{(抓持器运行时间 + 冷却时间)}$$

$$冷却时间（秒） = \left(\frac{抓取器运行时间}{D\ (\%)}\right) - 抓取器运行时间$$

电源
为执行器提供电源所需的连续电压。

峰值电流
受总线电压限制的电机最高供电电流、电机的电阻（设置温度）以及建设性因素。
对于线性电机、电动线性执行器和电动线性导槽，这是最大的 rms 值。

无电刷电机功率
最高机械无电刷电机功率。

连接
标准金属圆形 M8x1、3 极连接器。

Glossary

Total gripping force
Average jaws gripping force.

Total gripping force
Average jaws gripping torque.

Swivelling torque
Average provided torque on the rotary plate.

Stroke
Average value of the total jaws stroke.

Frequency
Mean frequency value for a cycle comprising opening, closure and cooling time to prevent the motor from overheating.
This value is calculated with no load connected to the actuator.

$$F\ cycle\ (Hz) = \frac{1}{(T\ working\ gripper + T\ cooling)\ x\ 2}$$

Closing jaws time
Mechanical moving jaws time after motor starts running and before spring compression.

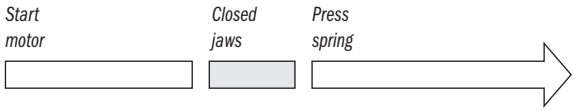

Working gripper time
Start motor, jaws movement and spring compression total time.

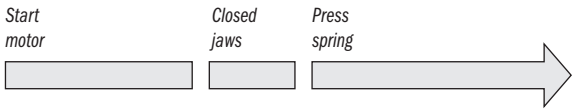

Duty cycle
Ratio of time that actuator spends in an active state to the time spent to make the total cycle with cooling time included.

$$D\ (\%) = \frac{T\ working\ gripper}{(T\ working\ gripper + T\ cooling)}$$

$$T\ cooling\ (s) = \left(\frac{T\ working\ time}{D\ (\%)}\right) - T\ working\ time$$

Power supply
Necessary continuous voltage to power supply actuator.

Peak current
Maximum motor supply current, limited by the BUS voltage, the motor's electrical resistance (at a set temperature) and constructive factors.
For linear motors, electrical linear actuators and electric linear guideways, it is the maximum rms value.

Brushless motor power
Maximum mechanical Brushless motor power.

Connection
Standard metal round M8x1, 3 pole connector.

术语

打开/关闭输入信号
24 伏直流和接地可驱动开路集电器逻辑系统。

运行温度
室温指的是标称运行条件。受材料特征和润滑油粘度限制。

环境防护等级
带有电气外罩的机械外壳提供防止进入固体物质和水的防护等级。

噪音水平
用分贝表示工业区域噪音水平。

质量
包括无电刷电机的执行器总质量。

IPA 洁净室认证
通过弗朗霍夫生产技术研究所开展的 ISO 146444-1 洁净室认证。

CE 认证
电磁兼容性 (EMC) 符合 EN61000-06-2:2005、EN61000-6-3:2007 和 EN61000-6-4:2007 的规定。

总线电压
电机启动时提供峰值电压。

峰值力
峰值电流力。

力系数
馈电电流和电机力输出之间的直接比例常数。

堵塞
永磁和定子之间造成每一极定期磁阻的交互作用。

连续力
连续电流的电机力输出能力。

连续电流
可以无限提供给电机以达到最高额定内部温度（未过热）的电流。

相阻
在预定温度通过相端子测量的等效电阻值。

相位感应
在相位端子测量的等效电感。

BEMF 常数
电机以 1 米/秒移动时产生的反电压。

热阻
从电机散发的每瓦功率过热。

Glossary

Open/closed input signal
Open collector logic system drivable with 24Vdc and GND.

Operating temperature
Room temperature refers to the nominal operating conditions. It is limited by the characteristics of the materials and the viscosity of the lubricant.

Environmental Degree
Degree of protection provided against intrusion of solid objects and water in mechanical casings with electrical enclosures.

Noise level
Industrial area noise level espressed in decibel.

Mass
Total actuator mass with Brushless motor included.

IPA Clean Room Certifcation
ISO 146444-1 clean room certification made by Fraunhofer Instutute.

CE certification
Electromagnetic compatibility (EMC) accordingly with EN61000-06-2:2005; EN61000-6-3:2007; EN61000-6-4:2007.

BUS voltage
Peak voltage supplied at motor start-up.

Peak force
Peak current force.

Force coefficient
Constant of direct proportionality between the feed current and the motor force output.

Cogging
Interaction between permanent magnets and stator that causes a periodic detent force at every pole.

Continuous force
Motor force output capacity with continuous current.

Continuous current
Current which can be supplied to the motor indefinitely, at which it reaches the maximum rated internal temperature (without overheating).

Phase resistance
Value of equivalent electric resistance measured across the terminals of a phase at a predetermined temperature.

Phase inductance
Equivalent electric inductance measured across the terminals of a phase.

BEMF constant
Back voltage generated when the motor is 1 m/s moved.

Thermal resistance
Overheating for every Watt power dissipate from the motor.

术语

热常数
电机达到最高温度所用的时间。

最高相温度
最高允许绕组温度。

PTC 值
温度传感器 (PTC) 的 阻值。
可以采用下列方式计算绕组温度:

绕组温度 (°C) ≅ (PTC 电阻 X 0.216) - 190

PTC 最高电压
适用于 PTC 电热调节器的最高馈电电压。

反馈变送器
检查和测量电机/滑动器相关位置的电子设备。

回路输出
面向控制器的反馈变送器产生的信号类型。
ABZ：方波增量输出。
SIN/COS：正弦波编码器输出。
霍尔：电机相位调整的低分辨率反馈。

输出信号
使用的通讯标准。

电流消耗
从电源提供的最高传感器电流消耗。

工作速度
获取正确位置信息的最高传感器速度。

分辨率
系统可以执行的最小增量。

$$\text{分辨率 (}\mu\text{m)} = \frac{\text{极距}}{\text{脉冲}}$$

重复性
系统在例行环境执行和维持相同测量的能力。

极距
连续同极（北>北；南>南）之间的线性距离。

脉冲/正弦
单极距中包含的增量脉冲或正弦波。

Glossary

Thermal constant
Time taken from the motor to reach the maximum temperature.

Max phase temperature
Maximum permissible winding temperature.

PTC value
Resitance value of the temperature sensors (PTC).
Winding temperature could be calculated by:

T winding (°C) ≅ (PTC resistance X 0.216) - 190

PTC max voltage
Maximum feed voltage applicable to the terminals of the PTC thermistor.

Feedback transducer
Electronic device to check and measure the motor/slider respective positions.

Circuit output
Type of signal generated by the feedback transducer toward the controller.
ABZ: square wave incremental output.
SIN/COS: sinusoidal wave encoder output.
HALL: low resolution feedback for motor phasing.

Output signal
Communication standard used.

Current consumption
Maximum sensor current consumption provided from power supply.

Working speed
Maximum sensor speed to get correct position information.

Resolution
Smallest incremental pitch that system can perform.

$$\text{Resolution } (\mu m) = \frac{\text{Pole pitch}}{\text{Impulses}}$$

Repeatabilty
Ability of a system to perform and maintain same measure in routine circumstances.

Pole Pitch
Linear distance between the consecutive same poles (North > North; South > South).

Impulses / Sinusoid
Incremental impulses or sinusoidal waveforms included in a single pole pitch.

注释
Notes

注释
Notes

注释
Notes

注释
Notes

注释
Notes

注释
Notes

注释
Notes

Distributors of Mechatronics products

30/09/2016

GIMATIC Group

CONSOCIATE ITALIANE

Piemonte, Liguria, Valle D'Aosta, Como, Lecco, Milano, Monza e Brianza, Pavia, Varese, Lodi, Verbania, Campania, Lazio, Puglia, Basilicata, Calabria Sicilia, Sardegna
GIMATRADE S.r.l.
Via Borgomanero, 1
28010 Veruno (NO)
Tel. +39 0322 830624
Fax +39 0322 830624
info@gimatrade.it
www.gimatrade.it

Bergamo, Brescia, Cremona, Mantova, Sondrio
Bolzano, Trento
Verona
Piacenza, Parma, Reggio Emilia
Toscana
GIMATRADE BRESCIA S.r.l.
Via Chiusure, 5/b
25127 Brescia (BS)
Tel. +39 030 320212
Fax +39 030 2415436
info@gimatradebrescia.it
www.gimatradebrescia.it

Padova, Rovigo, Vicenza
Modena, Bologna, Ferrara, Ravenna, Forlì e Cesena, Rimini
GIMATRADE VICENZA S.r.l.
Piazzetta Aldo Moro, 12
35035 Mestrino (PD)
Tel. +39 049 9004613
Fax +39 049 9004613
info@gimatradevicenza.it
www.gimatradevicenza.it

Belluno, Treviso, Pordenone, Venezia, Udine, Trieste, Gorizia
GIMATRADE TREVISO S.r.l.
Via Giovanni Verga, 21
33082 Corva di Azzano (PN)
Tel. +39 0434 646156
Fax +39 0434 646156
info@gimatradetreviso.it
www.gimatradetreviso.it

GIMATIC Group

FOREIGN SUBSIDIARIES

Germany
GIMATIC VERTRIEB GmbH
Linsenäcker 18
72379 Hechingen
Ph. +49 7471 96015 – 0
Fax +49 7471 96015 – 19
zentrale@gimaticvertrieb.de
www.gimaticvertrieb.de

Spain
GIMATIC SPAIN s.l.
C/Corín Tellado n°8 - 1°A
33204 Gijón - Asturias - ESPAÑA
Ph. +34 984 493 897
Fax +34 984 493 897
jrodriguez@gimaticspain.es
www.gimaticspain.com

France
EURL GIMATIC FRANCE
265 rue Denis Papin
38090 Villefontaine - FR
Ph. +33 768 380 865
vbecart@gimatic.fr
www.gimatic.fr

Denmark, Iceland, Estonia, Lithuania, Latvia, Finland, Sweden, Norway
GIMATIC NORDIC AB
Oestergarden 114
18637 Vallentuna - SE
Ph. +46 (8) 121 445 00
Fax +46 (0) 8 120 503 70
nordic@gimatic.se
www.gimatic.com

Czech Republic, Slovakia
GIMATIC CZECH REPUBLIC, s.r.o.
Pod Hájem 290
250 73, Přezletice
Ph. +420 608 954 500
Fax +420 222 364 605
info@gimatic.cz
www.gimatic.cz

Poland
GIMATIC POLSKA Sp. z o.o.
Okulickiego 23b/58
42-200 Częstochowa
Ph. +48 34 38 73 052
Fax +48 34 38 73 051
gimatic@gimaticpolska.pl
www.gimaticpolska.pl

Turkey
GIMATIC OTOMASYON TICARET LTD. STI.
Perpa Tic. Merk. A Blok Kat:11
No:1478
34160 Okmeydani, Istanbul
Ph. +90 212 210 83 91
Fax +90 212 210 83 98
gimatic@gimatic.com.tr
www.gimatic.com.tr

China, Hong Kong, Macao, Taiwan
GIMATIC AUTOMATION TECHNOLOGY (SHANGHAI) CO. LTD
Room 805, Block 8-9,
Lane 1500 South Lianhua Road
201108 Shanghai - CN
Ph. (+86) 021 54735580
Fax (+86) 021 54735680
info@gimatic-china.com
www.gimatic.com

South Korea
GIMATIC KOREA Limited
RN 215 27 Sankidaehak-ro
Siheung-si, Gyeonggi-do, Korea
(Jeongwang-dong, Rasung Venture Town)
Ph. +82 31 504 8771
Fax +82 31 504 8772
sales@gimatic.co.kr
www.gimatic.co.kr

Central and Latin America
GIMATIC AUTOMAÇAO Ltda
Rua Campos Salles, 190
09551-310 Bairro Barcelona
São Caetano do Sul
São Paulo - BRASIL
Ph. +55 11 4318 2550
Fax +55 11 4318 2551
gimatic@gimatic.com.br
www.gimatic.com.br

U.S.A., Canada, Mexico,
GIMATIC USA
28300 Euclid Ave.
44092 Wickliffe, Ohio - USA
Ph. +1 216 535 4811
Fax +1 216 535 4833
sales@gimaticusa.com
www.gimaticusa.com

Japan
GIMATIC JAPAN
3-3-15-702, Azabudai,
Minato-Ku - Tokyo, 106-0041
Ph. +81 (0)3 6322 5816
Fax +81 (0)3 6800 2770
info@gimatic.co.jp
www.gimatic.co.jp

ITALIA

Ancona, Pesaro Urbino, Macerata
A.T.I. S.r.l. ARTICOLI TECNICI INDUSTRIALI
Via Bruno Buozzi, 8
60044 Fabriano (AN)
Tel. +39 0732 639 111
Fax +39 0732 626 641
vendite@ati-srl.com
www.ati-srl.com

Abruzzo, Ascoli Piceno, Fermo, Macerata
TKF S.r.l.
Via Dei Castani
64014 Martinsicuro (TE)
Tel. +39 0861 762 092
Fax +39 0861 797 942
acquisti@tkfsrl.com

EUROPE

Austria
BRUTECS GmbH
Groß-Dörnbach Straße, 12
A-4073 Wilhering
Ph. +43 664 380 6747
Fax +43 7221 87093
office@brutecs.com
www.brutecs.com

Switzerland
ROBXPERTS GmbH
Aachstrasse 2
9326 Horn - SWITZERLAND
Ph. +41 62 822 33 77
mail@robxperts.com
www.robxperts.com

ROBOCOM AG
IM KELLERSFELD 21
9491 - RUGGEL - LI
Ph. +423 217 1369
sfontana@robocom.liv
www.robocom.li

Belgium, Luxembourg
CS PLASTICS bvba
Spieveldstraat 14
9160 Lokeren - BELGIUM
Ph. +32 9 262 04 60
Fax +32 (0)9 356 00 15
info@csplastics.be
www.csplastics.be

Netherlands
GRIPPING & HANDLING SOLUTIONS B.V.
Amer 53
5711 KJ Someren
The Netherlands
Ph. +31 654 962 059
Fax +31 493 470 176
info@g-hsolutions.com
www.g-hsolutions.com

United Kingdom
PRECISION MOTION (COFIL) Ltd
PO BOX 2034, Preston
PR5 9AD Lancashire
Ph. +44 177 233 96 33
Fax +44 177 233 63 62
stuart@precisionmotion.co.uk
www.precisionmotion.co.uk

United Kingdom
GEIGER HANDLING UK Ltd
Raleigh Hall Industrial
Estate - Eccleshall
ST21 6JL Stafford ENGLAND
Ph. +44 178 585 1111
Fax +44 178 585 9090
sales@geigerhandling.co.uk
www.gimatic.co.uk

Portugal
TECNOTRONICA Lda.
Zona Industrial da Murteira,
Lote n.22
2135 Samora Correia
PORTUGAL
Ph. +351 263 659 340
Fax +351 263 659 349
tecnotronica@mail.telepac.pt
www.tmac.pt

Greece
TECNOPNEUMATIC A.E.
97, Iera Odos Str.
11855 Athens – GRECIA
Ph. +30 210 346 70 00
Fax +30 210 347 99 30
avieris@tecnopneumatic.gr
www.tecnopneumatic.gr

Bulgaria
MASTER Ltd
26 Tsar Asen Str.
7000 Ruse - BULGARIA
Ph. +35 982 836 530
Fax +35 982 826 530
ruse@master-bg.com
www.master-bg.com

Hungary
GRIP-PLAST Kft.
Ikva u.7
H-8000 Székesfehérvár
HUNGARY
Mobil +36 302 093 773
Ph. +36 227 883 90
Fax +36 227 883 90
a.jobbagy@grip-plast.hu
www.grip-plast.hu

Serbia, Slovenia, Croatia
KOVIMEX
Podskranik 60
1380 Cerknica – SLOVENIA
Ph. +386 (170) 96 430
Fax +386 (402) 18 211
kovimex@kovimex.si
www.kovimex.si

Russia
IBC SYSTEMS
Kuskovskaya str.20A, off.611A
111141 Moscow - RUSSIA
Ph. +74 957 270 528
Fax +74 957 270 529
info@ibcplastic.ru
www.ibcplastic.ru

ASIA

India
NEEJTECH INDIA
305, Swagat Building C.G. Road,
Ahmedabad
380009 - GUJARAT - IN
Ph. +91 98250 40231
Fax +91 79265 61312
info@neejtech.com
www.neejtech.com

Israele
R.E.P. Automation Ltd
2, HaAmelim St.
P.O.B.10115
Haifa Bay 26110
Ph. +97 248 403 012
Fax +97 248 403 013
rep@repac.co.il
www.repac.co.il

Malesia, Thailand
FUTURE STATE (Asia) Co. Ltd.
86/1 Soi Thianthalay, 22
Bangkhunthian
Thakham, Bangkhunthian
10150 Bangkok Thailand
Ph. +66 25 30 04 05
Fax +66 25 30 04 06
nianinbkk@hotmail.com
www.futurestateasia.com

Indonesia, Malesia, Thailand
ROBOMATION EQUIPMENT SDN BHD
N.13A, Jalan Kenari 17D
Bandar Puchong Jaya
47170 - Puchong, Selangor,
MALAYSIA - MY
Ph. +60 380 750 833
Fax +60 380 600 666
osprecisions@gmail.com

AFRICA

South Africa
PLASTIC & CHEMICAL TRADING
P.O BOX 92223 Norwood
2117 - SOUTH AFRICA
Ph. +27 11 483 3015
Fax +27 11 728 3419
matt@plastrading.com

AMERICA

Argentina
GENERAL AUTOMATION Srl
ALVEAR, 360
1619 GARIN (BUENOS AIRES)
Ph. +54 (0) 348 462 4481
am@ga-srl.com.ar
www.ga-srl.com.ar

Canada
SEMPRESS CANADA INC
9-3250 Ridgeway Drive
L5L-5Y6
Mississauga - Ontario - CANADA
Ph. 905.949.2324
Fax 905.949.1944
brentmccurdy@sempress.ca
www.sempress.ca

Chile, Peru
EQUIPAMIENTO Y AUTOMATIZACION PROAPSIS Spa
Las Calizas, 58
Cond. Los Portones Colina
9340000 Santiago - CL
Ph. +56 998 282 612
jvasquez@proapsis.cl
www.proapsis.cl

OCEANIA

Australia
ENKOSI PTY LTD
Unit 3/9 Nicole Close
3153 Bayswater noth vic
AUSTRALIA
Ph. +61 397 616 377
Fax +61 397 616 499
graham@enkosi.com.au
www.enkosi.com.au

CAT-MECHA2016-CN-EN Ed. 09/2016

via Enzo Ferrari, 2/4
25030 Roncadelle (BS) ITALIA
tel. +39 030 2584655
fax +39 030 2583886
info@gimatic.com
www.gimatic.com

经销 / *Distributed by*

CAT-MECHA2016-CN-EN